ARMY, MARINE CORPS, NAVY, COMBAT AIR FORCES

HA

MULTISERVICE PROCEDURES FOR HUMANITARIAN ASSISTANCE OPERATIONS

FM 100-23-1
FMFRP 7-16
NDC TACNOTE 3-07.6
ACCP 50-56
PACAFP 50-56
USAFEP 50-56

AIR LAND SEA APPLICATION CENTER

OCTOBER 1994

DISTRIBUTION RESTRICTION:
Approved for public release.
Distribution is unlimited.

MULTISERVICE TACTICS, TECHNIQUES, AND PROCEDURES

FOREWORD

This publication has been prepared under our direction for use by our respective commands and other commands as appropriate.

FREDERICK M. FRANKS, JR.
General, USA
Commander
Training and Doctrine Command

CHARLES C. KRULAK
Lieutenant General, USMC
Commanding General
Marine Corps Combat
Development Command

FREDERICK L. LEWIS
Rear Admiral, USN
Commander
Naval Doctrine Command

JOHN M. LOH
General, USAF
Commander
Air Combat Command

FM 100-23-1/FMFRP 7-16/NDC TACNOTE 3-07.6
ACCP 50-56/PACAFP 50-56/USAFEP 50-56

COMBAT AIR FORCES AUTHORIZATION

The procedures in this publication are authorized for use throughout the Combat Air Forces as indicated below.

US Air Forces Europe

JAMES L. JAMERSON
General, USAF
Commander

MICHAEL L. JONES
Colonel, USAF
Director of Information Management

Pacific Air Forces

JOHN G. LORBER
General, USAF
Commander

BRIAN D. MILLER
Colonel, USAF
Director of Information Management

DISTRIBUTION

This publication is available through service publication systems.

Distribution Restriction: Approved for public release: distribution is unlimited.

MARINE CORPS: PCN 140 071600 00

FM 100-23-1
FMFRP 7-16
NDC TACNOTE 3-07.6
ACCP 50-56
USAFEP 50-56
PACAFP 50-56

FM 100-23-1	US Army Training and Doctrine Command Fort Monroe, Virginia
FMFRP 7-16	Marine Corps Combat Development Command Quantico, Virginia
NDC TACNOTE 3-07.6	Naval Doctrine Command Norfolk, Virginia
ACCP 50-56	US Air Force Air Combat Command Langley Air Force Base, Virginia
USAFEP 50-56	US Air Forces Europe Ramstein Air Force Base, Germany
PACAFP 50-56	Pacific Air Forces Hickam Air Force Base, Hawaii

31 October 1994

HA

Multiservice Procedures for Humanitarian Assistance Operations

CONTENTS

Page

Preface iv
Executive Summary vi
Chapter 1 Overview 1-1
Terminology 1-1
Types of Operations 1-2
Range of Operations 1-3
Environments of Operations 1-6
Principles of Operations 1-8
Other Considerations 1-9

Page

Chapter 2 Strategic-Level Roles and Coordination 2-0
Strategic-Level Authorities 2-0
International Authorities 2-7

Chapter 3 Operational-Level Roles and Responsibilities 3-0
The Unified Command 3-0
Other Key Organizations 3-8
Areas for Cooperation of Effort 3-10

Chapter 4 Tactical-Level Organization and Coordination 4-0
Joint Task Force Tailoring 4-0
Predeployment 4-2
Deployment 4-9
Employment 4-10
Redeployment 4-19
Transition and/or Termination 4-20

Chapter 5 Domestic Operations 5-0
Legal Authority 5-1
Responsibilities 5-3
Disaster Assistance 5-6

Appendix A JTF Humanitarian Assistance Operations from 1983 through 1993 ..... A-1

Appendix B Legal Issues B-1

Appendix C Listing of Nongovernmental and Private Voluntary Organizations C-0

Appendix D United Nations Organizations for Humanitarian Assistance D-1

Appendix E Situation and Needs Assessment E-1

Appendix F DOD and Office of Foreign Disaster Assistance Support F-1

Appendix G Disaster Assistance Response Team G-0

Appendix H Liaison Officers' Procedures and Checks H-1

Appendix I Insignia of the United States Armed Forces I-1

Appendix J Lessons Learned from Recent HA Operations J-1

Glossary Glossary-0

References References-1

Index Index-0

PREFACE

PURPOSE

This publication provides military forces, civilians, and volunteer organizations with information pertaining to humanitarian assistance (HA) operations where the size or extent of the assistance requires the formulation of a US military joint task force (JTF).

SCOPE

This publication provides common definitions, principles, and types of operations associated with HA. It describes the roles and functions of the military, civilian agencies, private voluntary organizations, and international organizations involved with HA at strategic, operational, and tactical levels.

This publication provides techniques for operational coordination between a JTF and other organizations at the operational and tactical levels. It suggests connectivity between the military and civilians involved with foreign humanitarian operations. *HA* provides the JTF commander, his staff, and supporting components with information to assist in planning and executing HA operations. It provides nonmilitary agencies supporting HA operations with information regarding military HA operations.

APPLICABILITY

All units supporting a humanitarian assistance JTF should use this publication for planning and training purposes. This publication applies to operations conducted by multiservice forces in a joint, interagency, or multinational environment. It can be useful to nonmilitary agencies or foreign military units participating in coalition HA operations. The techniques and procedures presented are generic and apply worldwide.

IMPLEMENTATION PLAN

Participating major service command offices of primary responsibility (OPRs) will review this publication for joint procedural information. Once they validate the information, OPRs should reference and incorporate it in the following service manuals, regulations, and curricula.

ARMY

The Army will incorporate the procedures in this publication in US Army doctrine and training publications as directed by the commander, US Army Training and Doctrine Command.

MARINE CORPS

The Marine Corps will incorporate the procedures in this publication in US Marine Corps doctrinal and training publications as directed by the commanding general, US Marine Corps Combat Development Command.

NAVY

The Navy will validate and incorporate the procedures in this publication in US Navy doctrinal and training publications as directed by the commander, Naval Doctrine Command.

COMBAT AIR FORCES

The Air Combat Command will incorporate the procedures according to Air Force Regulation 5–8 and HQ ACC/XPJ OI 5-1 (OPR: HQ ACC/XPJ). USAFE and PACAF will validate and incorporate appropriate procedures in accordance with applicable major command and other governing directives.

USER INFORMATION

The Air Land Sea Application (ALSA) Center developed this publication with the participation of the approving service commands. ALSA will review and update this publication as necessary. Send comments and recommendations directly to—

ARMY

Commander
US Army Training and Doctrine Command
ATTN: ATDO-J
Fort Monroe, VA 23651-5000
DSN 680-3153, COMM (804) 727-3153

MARINE CORPS

Commanding General
US Marine Corps Combat Development Command
ATTN: C42
2042 Broadway Street, Suite 214
Quantico, VA 22134-5021
DSN 278-3608, COMM (703) 640-3608

NAVY

Commander
Naval Doctrine Command
ATTN: N5
1540 Gilbert Street
Norfolk, VA 23511-2785
DSN 565-0565, COMM (804) 445-0565

AIR FORCE

Commander
Air Combat Command
ATTN: XPJ
204 Dodd Boulevard, Suite 202
Langley Air Force Base, VA 23665-2778
DSN 574-2985, COMM (804) 764-2985

OTHER

Office of Foreign Disaster Assistance
US Agency for International Development
Room 1262A
320 21st Street NW
Washington, DC 20523-0008
(202) 647-7435

Director
Air Land Sea Application Center
114 Andrews Street, Suite 101
Langley Air Force Base, VA 23665-2785
DSN 574-5934, (804) 764-5934

Unless this publication states otherwise, masculine nouns and pronouns do not refer exclusively to men.

EXECUTIVE SUMMARY

HA

Multiservice Procedures for Humanitarian Assistance Operations

This tactics, techniques, and procedures manual describes US military JTF involvement in HA operations. Military and civilian after-action reports identify the need for expanded joint and interagency procedures to enhance military and civilian interoperability. For a mission to conclude effectively, HA teams must understand the mission and the partners involved in the effort; that is the theme of this manual. This TTP describes the interaction among military and civilian agencies in terms of three main levels of effort: strategic, operational, and tactical.

OVERVIEW

Military involvement in humanitarian assistance is not new. In fact, military humanitarian civil assistance operations are conducted on a regular basis. This manual, however, pertains to large-scale situations requiring a military response in the form of a joint task force. JTF response would be necessary because of the need for a quick response reaction or the need for military logistics, security, or transportation capabilities. For HA, a JTF must work and coordinate with a number of national and international agencies and organizations who are also involved in the effort. Military members need to understand that organizations may have been operating in the area before the JTF arrived. Civilian organizations need to understand the nature of the responding military force as well. The bottom line is that military commanders are likely to work with and depend heavily on civilian organizations to complete their HA taskings. A JTF's HA mission cannot successfully conclude unless in-place organizations operate effectively. Successful interaction among organizations is key.

STRATEGIC-LEVEL INTERAGENCY COORDINATION

At the strategic level, national authorities and cabinet-level authorities determine broad policy and forms of response. This chapter discusses coordination considerations at the policy level, to include coordination with the United Nations (UN), other international organizations (IOs), and nongovernmental and private voluntary organizations (NGOs and PVOs).

OPERATIONAL-LEVEL ROLES AND RESPONSIBILITIES

Regional commands and organizations finalize plans, determine the phases and timing of efforts, and pull resources together at the operational level. This chapter addresses central coordinations that take place at the operational level and introduces the JTF level of response.

TACTICAL-LEVEL ORGANIZATION AND COORDINATION

Tactical-level units execute the mission, which is the main thrust of this publication. This chapter provides detailed procedures and considerations for HA operations. It includes a discussion of the CMOC. It includes a discussion of JTF organization and planning responsibilities for predeployment, deployment, employment, redeployment, and transition and/or termination.

DOMESTIC OPERATIONS

The final chapter presents an overview of domestic HA operations as prescribed by Army Field Manual 100-19/Fleet Marine Force Manual 7-10.[1] It provides comparative examples to foreign operations.

---

[1] *Domestic Support Operations,* 1 July 1993.

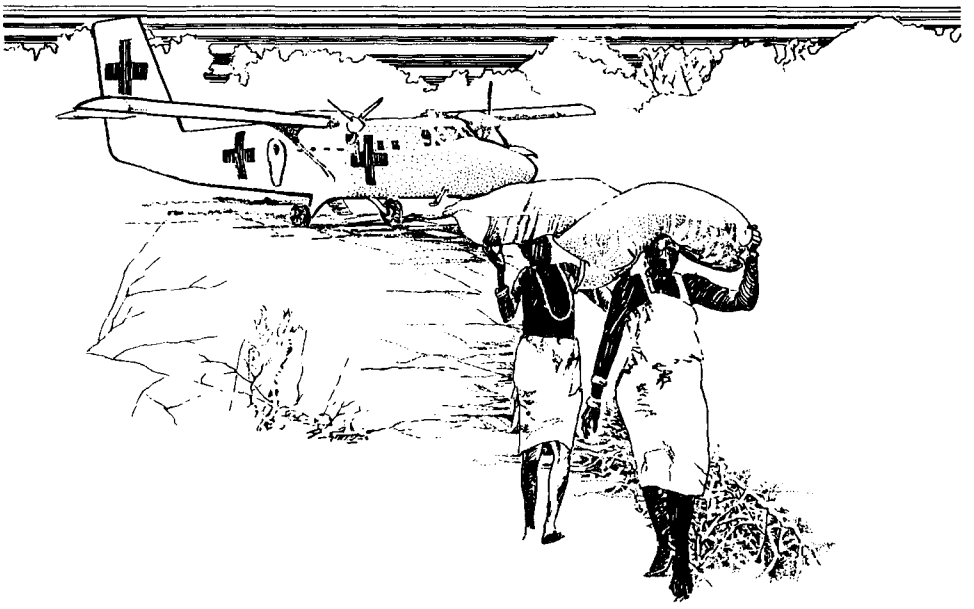

Chapter 1

OVERVIEW

Humanitarian assistance (HA) is different things to different audiences. It may be confused with peace operations, given the development of crises in Somalia, the Former Republic of Yugoslavia, and Northern Iraq. Although HA operations may be conducted simultaneously with peace operations, they are different in nature and purpose.

This chapter discusses the terminology and types of operations, range of operations, environments of operations, and principles of operations peculiar to HA. United States (US) military forces tasked for HA operations include all active and reserve components of the US Army, Navy, Marine Corps, Air Force and, when applicable, the Coast Guard. The objective of these military forces is to execute humanitarian missions when directed by cognizant legal authority.

TERMINOLOGY

HA includes programs conducted to relieve or reduce the results of natural or man-made disasters or other endemic conditions such as human pain, disease, hunger, or privation that might present a serious threat to life or result in great damage or loss of property. HA provided by US forces is limited in scope and duration. The assistance is designed to supplement or complement the efforts of the host nation civil authorities or agencies that may have the primary responsibility for providing HA[1].

Nongovernmental organizations (NGOs) are predominantly European national or international, nonprofit citizen's voluntary organizations. They are involved in such diverse activities as education, technical projects, relief, and refugee and development programs. Examples of NGOs include, but are not limited to, religious, peace, disarmament, environmental, development, and human rights groups.

1. Joint Publication 1-02, *DOD Dictionary of Military and Associated Terms*, 8 September 1993.

Private voluntary organizations (PVOs) are private, US-based, nonprofit organizations involved in humanitarian efforts including, but not limited to, relief, development, refugee assistance, environment, public policy, or global education.

International organizations (IOs) are organizations, such as the United Nations (UN) and the International Committee of the Red Cross (ICRC), with global influence.

Peace operations is the umbrella term that encompasses three types of activities—activities with predominantly diplomatic lead (preventive diplomacy, peacemaking, peace building) and two complementary, predominantly military, activities (peacekeeping and peace-enforcement).

Peacekeeping (PK) operations are neutral military or paramilitary operations that are undertaken with the consent of all major belligerents. They are designed to monitor and facilitate implementation of an existing truce and support diplomatic efforts to reach a long-term political settlement.

Peace-enforcement (PE) is the application of military force, or the threat of its use, normally pursuant to international authorization, to compel compliance with generally accepted resolutions or sanctions designed to maintain or restore peace and support diplomatic efforts to reach a long-term political settlement. The primary purpose of PE is the restoration of peace under conditions broadly defined by the international community.

TYPES OF OPERATIONS

A chief purpose of military forces conducting foreign HA operations is to provide a secure environment to allow humanitarian relief efforts to progress. As such, HA missions for US military may cover a broad range of taskings. In every case, the specific requirements placed on US soldiers, sailors, marines, and airmen will be situation-dependent. HA means vastly different things to different people, based on their specific perspective. HA operations can encompass both *reactive* programs, such as disaster relief, and *proactive* programs, such as humanitarian and civic assistance (HCA) or civil support.

DISASTER RELIEF

Disaster relief operations can be conducted across the entire range of military operations and can range from domestic natural disasters to the aftermath of foreign conflicts. HA missions in the area of disaster relief include efforts to mitigate the results of natural or man-made disasters. Examples of disasters include hurricanes, earthquakes, floods, oil spills, famine, and civil conflicts. Potential roles for US forces include the construction of basic sanitation facilities, repair of public facilities, construction of shelters, provision of food and medical care, and immediate response to relieve suffering, prevent loss of life, and protect property.

REFUGEE ASSISTANCE

Refugee programs are specific programs designed to support the resettlement of refugees and displaced persons. UN classifications of persons in these two categories are important because of certain legal ramifications and sanctions associated with these designations. Department of Defense (DOD), in Joint Publication 1-02, defines these categories. Refugees are civilians who, by reason of real or imagined danger, have left home to seek safety across an international border. The UN definition of *refugee* is similar but specifies the person is "outside his country of origin." Displaced persons are civilians who are involuntarily outside the natural boundaries of their country. Programs include—

- Administration of camps.
- Care (food, supplies, medical care, and protection).
- Placement (movement or relocation to other countries, camps, and locations).

The UN coordinates international refugee and displaced person programs as directed by the secretary general of the UN.

HUMANITARIAN AND CIVIC ASSISTANCE

HCA is a component of the Nation Assistance Program, under purview of the foreign internal defense and development concept. HCA is normally a long-term proactive program coordinated by regional unified commands. Deployed military units conduct these activities, which include medical, dental, and veterinary care and some local infrastructure construction and repair.

Nation assistance furthers the establishment of an effective local government supporting the goal of crisis prevention. Nation assistance therefore includes those actions that assist in and support legitimate governments of host nations and counter attempts by destabilizing forces from within the affected nation. HCA is governed by Title 10, US Code, Section 401, which states that HCA—

- Must be carried out in conjunction with host nation military and/or civilian personnel.
- Shall complement and may not duplicate any other form of social or economic assistance provided to the host nation by another department or agency of the US.
- May not be provided directly or indirectly to any individual, group, or organization engaged in military or paramilitary activity.
- May not be provided unless the Department of State (DOS) specifically approves such assistance.

CIVIL SUPPORT

Civil support is another long-term effort to assist local governments in domestic support areas such as repairs to infrastructures and actions that enable the existing government to govern. Civil support can also include environmental assistance—restoration, conservation, and protection of the environment. Civil support should not be considered a direct responsibility of HA operations; however, civil support-type activities invariably occur during HA and should be closely monitored to prevent expansion of the originally intended HA operation (see paragraph on *Mission Creep* in Chapter 3).

RANGE OF OPERATIONS

US military forces participate in three basic types of HA operations:

- Those coordinated by the UN.
- Those where the US acts in concert with other coalition forces.
- Those where the US responds unilaterally.

UNITED NATIONS-COORDINATED OPERATIONS

The international process to conduct HA operations has been undergoing a period of rapid and fundamental change associated with the end of the Cold War. The UN has become more actively involved in worldwide HA missions. These include not only UN coordination of certain HA operations but in some cases the commitment of dedicated UN forces to the area of operations (AO).

UN-coordinated operations that involve military forces normally take the form of specifically designated peace operations. However, these operations can also be purely HA operations. In Somalia, for example, the UN agreed to provide security for relief efforts on the part of NGOs and PVOs. This support included the tasking of UN observers to monitor relief operations, making it the first occasion to use military observers for humanitarian relief.

Certain HA operations may begin as a multinational or unilateral US response and later become UN-sanctioned. The UN often experiences significant time delays as the organization works through the process of achieving international consensus. A unilateral or multinational response to a crisis situation may be faster than a parallel UN response.

MULTINATIONAL OPERATIONS

US military operations are often conducted with the armed forces of other nations in pursuit of common objectives. Multinational operations, both those that include combat and those that do not, are conducted within the structure of an alliance or coalition. A coalition is a multinational action outside the bounds of established alliances, usually for single occasions or longer cooperation in a narrow sector of common interest. Multinational operations are likely to occur in large-scale HA operations. The development of clearly defined command relationships for each coalition is an essential ingredient for successful HA operations. The relationship depends on two factors.

- The first factor is the HA mission requirements and the duration of the HA operation.
- The second factor is the political sensitivity exerted by the coalition partners involved in the HA operation.

During Operation Restore Hope, more than 40 countries offered initial assistance to participate in the HA effort. The types of forces, size of personnel commitments, dedication of supplies, and other contributions had to be carefully managed to match the requirements of the mission. US Central Command (USCENTCOM) developed a force data questionnaire and used it to gather information on each country's HA forces. This data was used to plan lift and support requirements and assist in the effective use of the forces once they reached Somalia. In addition, USCENTCOM organized a coalition working group and met frequently to review the current status of nations participating in the HA operation. These two techniques proved essential to managing the diverse contributions of coalition partners.

Based on USCENTCOM staff interviews

Foreign military forces receive guidance from their political leadership on how to interact with other members of the coalition and how to interact with specific agencies. The diverse political goals of contributing nations affect military and nonmilitary coordination and impact the command and control (C^2) structure.

Multinational HA operations provide unique and difficult challenges to coordination, which include language translation, cross-cultural sensitivities, and national perspectives. Early detailed planning stresses establishment of essential liaison requirements.

US UNILATERAL OPERATIONS

In specific HA operations, the US Government may direct US military forces to act in concert with other US Government departments without direct involvement of other nations. Such would normally occur in situations where the US decides to act on its own—for expediency or self interest—to rapidly respond to a crisis.

JOINT FORCE OPERATIONS

A *joint force operation* is a military operation in which more than one service participates. Virtually every large-scale HA operation will be a joint force operation organized as a joint task force (JTF). The need for a joint response is based on the complementary nature of US armed forces for actions in the theater of operations.

Each service brings to the HA mission certain unique capabilities such as Air Force airlift, Navy sealift and construction (Seabees), Army civil affairs (CA), and Marine combat service support (CSS), shipboard helicopters, and so forth. The JTF is the central focal point for coordinating all US military actions with other agencies, forces, and nations.

US military forces tasked to participate in a foreign HA operation will be part of a JTF, and, in all likelihood, that JTF will be part of a larger coalition response or multinational task force (MTF). The JTF is discussed in detail in Chapters 3 and 4. An example of a recent JTF to support HA was Operation Able

Manner/Safe Harbor, Guantanamo Bay, Cuba, in 1991 and 1992. A multiservice response was required when large numbers of Haitian immigrants were intercepted by US Coast Guard cutters in the Windward Passage and brought to Cuba. The commander of the joint task force (CJTF) was a US Marine Corps brigadier general who directed the joint service operation.

Initially, the USS Tortuga (LSD 46) provided temporary messing, berthing, and medical support for up to 1,000 immigrants. As the JTF came on line, Army CA units, Navy Seabees, and Army engineer units established five holding camps to process and administer the Haitian immigrants. While their legal status was being determined, the JTF continued to provide security, food, medical care, and all aspects of public administration for the camps. (For additional examples of JTF responses, see Appendix A.)

Based on an interview with a participant of JTF Guantanamo

SINGLE-SERVICE OPERATIONS

Individual services are responsible for training, equipping, and organizing the forces that conduct HA operations. These forces must be capable of operating as individual units, with other services in a joint or multinational environment, or, as is expected in HA operations, within the context of an interagency scenario.

SMALL-UNIT OPERATIONS

Small-unit operations include tasking of individual units to provide tailored or specialized services. Such services, for example, would include tasking company-size medical units to provide emergency medical support in remote areas or short-term detachments of aircraft and personnel to provide quick-reaction transportation capabilities. Small-unit operations may be the precursor to large-scale HA missions or may be specifically designed to meet limited HA objectives.

MILITARY OPERATIONS OTHER THAN WAR

Military operations other than war (MOOTW) represent a wide range of operations occurring in both domestic and foreign environments and include combat and noncombat operations. Specific operations include, but are not limited to—

- Noncombatant evacuation operations (NEO).
- Strikes and raids.
- Arms control, enforcement of exclusion zones, peacekeeping, and peace enforcement.
- Nation assistance.
- Protection of shipping.
- Humanitarian assistance.

Operations Urgent Fury, Provide Comfort, Restore Hope, and Sea Angel and JTF Andrew are examples of MOOTW. As compared to war, MOOTW are more sensitive to political considerations because of the overriding objective to limit potential hostilities. When conducted in foreign environments, MOOTW support the diplomatic instrument of national power, which highlights the criticality of both the military's supporting role and interagency operations for successful mission accomplishment.

HA operations are often conducted simultaneously with other military missions. In most short-term, foreign HA operations, neutrality is an important aspect. Military forces should be aware that some nonmilitary agencies involved in HA operations, especially non-US agencies, do not see the US military as neutral. However, when they comprehend the tremendous capabilities of the US military, with its unique warfighting and humanitarian abilities, they become more receptive to increased interagency operations.

Peace operations—especially peace-enforcement—goals and objectives may differ from HA goals and objectives both in scope and duration. Attitudes of host nationals or conflict belligerents may vary from helpful cooperation to forceful opposition, depending on whether

the military force is or is not perceived to be an HA force or a peace operations force. Many peace operations include HA considerations, even when not expressed in the peace operation mandate and mission. HA-type missions that could occur in conjunction with peace operations include—

- Providing food, potable water, shelter, transportation, and engineer support to the resident population.
- Assisting in the delivery of humanitarian aid, especially to isolated communities.
- Providing emergency medical treatment and medical assistance programs for the prevention of disease.
- Providing extraction and evacuation of sick, injured, or wounded civilians.

HA is an important MOOTW mission that the US military is uniquely qualified to plan and execute. Unlike any other single organization, the military has the organizational structure, educated and trained personnel, essential equipment, rapid worldwide deployability, and ability to operate in austere physical environments.

Examples of MOOTW range from domestic support to combat operations. They include JTF Andrew, Operation Desert Shield, Operation Urgent Fury, and Operation Provide Comfort. MOOTW include a wide range of operations occurring in both domestic and foreign environments, which include both combat and noncombat operations. HA employs military assets to support noncombat objectives as part of MOOTW. Since MOOTW normally occur to support the political/diplomatic instrument, the military may not be in the lead. This highlights the criticality of interagency and NGO and PVO cooperation and coordination for mission success.

Based on input from the Center for Low-Intensity Conflict

ENVIRONMENTS OF OPERATIONS

The US force commander, in collaboration with other responding organizations, should assess the environment in which US forces will conduct HA operations. The operational environment includes the political situation, physical boundaries, potential threat to forces, global visibility, and media interest climate for HA operations.

Once the operational environment is confirmed, the US force commander determines the types and numbers of forces required to meet the assigned tasking. The environment determines the rules of engagement (ROE) to be used within the AOs. For HA, the more permissive the environment, the more predictable the outcome of the mission. Environments that military forces can expect to encounter in the conduct of HA operations may be permissive, uncertain, or hostile.

PERMISSIVE ENVIRONMENT

A permissive environment is conducive to HA operations. Little or no opposition or resistance to HA forces is expected. A permissive environment is normally associated with pure relief operations following a natural disaster or economic collapse, with assistance provided at the request of the host government. Nonhostile, anti-US interests may attempt to disrupt US military activities. The physical security environment may be permissive; however, other nonthreatening means, such as demonstrations, may be employed to impair credibility or reduce effectiveness of US military activities.

The distinction between HA in a permissive environment and in a hostile environment must be clear. Failure to make this distinction will result in inadequate planning and unrealistic

expectations. HA operations in a permissive environment are characterized by—

- Commonality of purpose for all parties.
- A quantifiable problem, often a single, natural disaster.
- Clear objectives, provision of support until normalcy returns.
- Host nation cooperation.

UNCERTAIN ENVIRONMENT

An uncertain environment is an operational environment in which host government forces, whether opposed to or receptive to operations that a unit intends to conduct, do not have totally effective control of the territory and population in the intended AO.

HOSTILE ENVIRONMENT

Hostile conditions, circumstances, and influences in the operational environment range from civil disorder or terrorist actions to full-scale combat. Forces conducting HA must be prepared for a full range of contingencies. Commanders can employ their forces to ensure the safety of the populace—defend the perimeter, provide escort convoys, screen the local populace, assist in personnel recovery operations, and so forth. HA operations in a nonpermissive environment are often characterized by—

- Multiple conflicting parties.
- Imminent danger to all parties.
- Relief used as a significant weapon that can be manipulated by combatants for political gain.
- Relief efforts that take on the overtones of CSS.

The more hostile the environment in which HA is conducted, the less predictable the force actions will be toward meeting defined mission objectives. HA forces must be prepared to counter actions by hostile guerrillas attempting to disrupt friendly forces and to counter mass actions by a previously friendly populace. Commanders should not depend on their humanitarian mission to shield them from hostile acts. HA commanders, in conjunction with higher authority, must determine the appropriateness of the use of force. The effects of the environment on humanitarian activities are depicted in Figure 1-1. As the environment becomes progressively more hostile, the corresponding requirement for security increases, while the capability for humanitarian activities, such as food distribution and medical assistance, decreases.

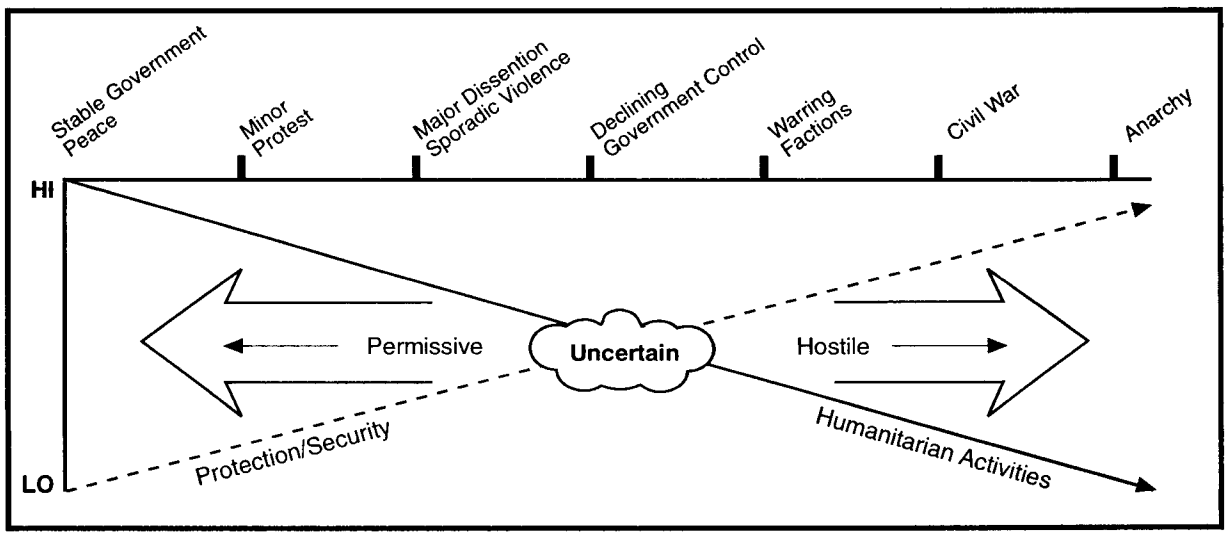

Figure 1-1. Effects of Operational Environment on Humanitarian Activities

HA commanders, in conjunction with higher authority, must determine the appropriateness of the use of force. An unarmed HA force is acceptable only in a permissive environment. This kind of environment would normally be found only when HA forces are called to respond to a natural disaster, such as in Operation Sea Angel in Bangladesh. In most HA situations, the force is armed. The CJTF must determine the proper level and types of armament, to include riot control agents (RCA) or cayenne pepper spray (CPS), when applicable.

In a region with diverse ethnic, racial, or clique components, warring factions may be present. Consent of these factions makes relief efforts easier. In the absence of consent, a political or diplomatic decision is made if the situation demands armed intervention as a preliminary to render HA. The risks associated with forcible action have to be anticipated.

PRINCIPLES OF OPERATIONS

The major contributions that the US military provides to any HA operation is a responsible, self-contained force that assists other agencies in accomplishing humanitarian relief. Military forces are normally tasked to provide some sort of short-term response in an HA crisis situation, while civilian agencies supporting the same HA operation have a long-term perspective toward providing aid and assistance. Planners must consider the differing perspectives of assistance providers when coordinating an HA operation.

Military commanders and planners tasked to support HA should consider a few broad and enduring principles to maximize the effectiveness of force employment. Such consideration minimizes situational reactions, improves efficiency, and encourages interagency cooperation when US military forces initiate HA operations.

OBJECTIVE

Direct every military operation toward a clearly defined, decisive, and attainable objective.

To achieve the objective, military commanders and planners should—

- Know that HA operations have different objectives than combat operations. Military units engaged in HA are tasked to supply a level of assets appropriate to the mission. Military units tasked with HA use a level of force appropriate to the mission.
- Know that clarity in HA tasking and the military role in support of HA is essential.
- Establish attainable and realistic HA goals.
- Develop clear HA mission-termination end state standards and ensure that all involved military and civil agencies understand them.
- Inform HA forces of the parameters and terms of reference within which they function.

UNITY OF EFFORT

Seek unity of effort toward every objective.

To attain unity of effort, US military commanders conducting HA operations—

- Support, cooperate with, and take direction from US civil governmental authorities.
- Establish clear lines of authority for HA forces.
- Appreciate political/diplomatic factors affecting the chain of command.
- Anticipate problems in focusing unity of command.

PERSEVERANCE

Prepare for the measured, protracted application of military capabilities to support strategic aims.

Commanders should balance their desire to attain objectives quickly with a sensitivity for long-term objectives. They must be assured of the resources required to preserve and accomplish HA goals. The forces must be prepared to support the assigned HA objectives and provide the necessary resources to accomplish the mission.

SECURITY

Never permit hostile factions to acquire an unexpected advantage.

To ensure security, US military commanders should—

- Provide HA force protection against virtually any person, element, or group.
- Know that HA success is proportional to the secure environment of the operation.
- Not underestimate the security risks to the force in either permissive or hostile environments. An inherent responsibility is the transition from a peaceful to combat posture, if needed.

RESTRAINT

Apply appropriate military capability prudently.

US military commanders will—

- Be constrained in the conduct of operations.
- Be advised of, promulgate, and understand detailed ROE. The inappropriate use of force may adversely affect legitimacy and neutrality.
- Establish appropriate channels to modify the ROE for unforeseen contingencies.
- Adhere to established procedures, particularly in dealing with the civilian populace.
- Understand that restraint is essential because a single act could cause critical political consequences.

LEGITIMACY

Promote the willing acceptance by the people of the right of the government to govern or of a group or agency to make and carry out decisions.

US military commanders and planners should—

- Ensure that HA operations adhere to internationally sanctioned standards.
- Know that host nation governmental authority should remain genuine.
- Know that neutrality is critical in gaining legitimacy. The purpose, delivery, or distribution of assistance should not be tied to the embracing or acceptance of any particular political, ethnic, social, economic, or religious creed by the intended beneficiaries.

OTHER CONSIDERATIONS

Other areas a commander must consider when conducting HA operations include organizational preparedness, force tailoring, cultural respect, funding authority, Title 10 authority, legal authority, media coverage, and mission termination.

ORGANIZATIONAL PREPAREDNESS

A commander must anticipate requirements for C^2 structures. The C^2 structure that directs the overall HA operation (UN, JTF) must be organized and have sufficient resources to meet its responsibilities. The C^2 structure must also be prepared to coordinate with nonmilitary groups, such as the Office of Foreign Disaster Assistance (OFDA), which is part of the United States Agency for International Development (USAID); mission donor coordination groups; UN agencies; and PVOs, NGOs, and IOs.

Information/intelligence is essential to successful HA operations. HA commanders must be prepared to deal with the difficulties of gathering, processing, and disseminating information in an HA environment. They must prepare forces for unique HA operations and anticipate equipping and training pipelines. Operational effectiveness can be directly enhanced and in-theater precrisis training minimized by periodic command post exercises.

FORCE TAILORING

Commanders must consider types, numbers, education and training, and equipment of HA forces in relation to the required HA tasks. They must tailor forces to meet specific HA objectives and requirements as well as potential threats.

CULTURAL RESPECT

US forces tasked with HA missions should be aware of the cultural diversity integral to international HA. US cultural perspectives may not be relevant to many foreign HA recipients or to some NGOs, PVOs, and IOs.

Military forces should avoid imposing ethnocentric standards on a group that resists those standards. For example, some cultures have clearly established guidelines for the consumption or avoidance of certain foods, the sanctity of religious structures, the appropriateness of certain types of behavior, and so on. Because of their beliefs, those cultures may refuse some forms of assistance.

Operations with a multinational task force present unique cross-cultural challenges for HA forces. Nations that are traditional military rivals may, in a disaster situation, support the same HA operation. Extensive and effective liaison reduces cultural barriers.

FUNDING AUTHORITY

The financial aspect of any HA operation is one of the biggest problems the CJTF faces. Logistics support can quickly accrue a significant level of expense. The longer the HA operation lasts, the greater the commitment of resources. Every HA operation must address the legal authority and mechanisms that allow US forces to acquire and disburse supplies and services. All parties participating in the HA mission must understand the fiscal constraints imposed on military forces.

Normally, US military forces participating in HA missions are reimbursed for expenses if certain criteria are met. USAID/OFDA coordinates payment of expenses for actions it requests DOD to perform. However, DOD must coordinate with USAID/OFDA before it expends the funds. Costs incurred or funds expended without prior USAID/OFDA coordination, or costs exceeding available USAID/OFDA resources, are not normally reimbursed without congressional action.

LEGAL AUTHORITY

The President and the Secretary of Defense (SECDEF), as the National Command Authorities (NCA), approve HA missions. DOS requests DOD capabilities. The CJCS, by the authority and at the direction of the SECDEF, orders overseas deployments. The HA commander should be aware of appropriate national and international directives, mandates, resolutions, or other documents related to the HA mission.

A military force is a legal, effective, and appropriate means for conducting an HA mission. To be legitimate, that force must exercise its authority for reasonable purposes and in accordance with international and domestic laws. HA forces must sustain the legitimacy of the operation and the host government. US military forces conducting HA must know the legitimate interests, prerogatives, and authority of various levels of civil government and agencies involved in HA and act accordingly (see Appendix B).

MEDIA COVERAGE

Commanders at all levels should anticipate extensive media coverage of HA activities. News media representatives are most likely on the scene or will soon arrive. Their interest in such operations is natural and should be facilitated to the maximum extent possible. Media coverage can assist the HA mission and support US national objectives. The importance of understanding the media is not so that commanders can control it but so they can anticipate its impact on HA operations and plans. The NCA and others may also use media coverage to measure the success of the mission.

The CJTF and his staff should develop a detailed public affairs (PA) strategy for the HA operation. This strategy should incorporate SECDEF, Joint Chiefs of Staff (JCS), and the supported commander in chief's (CINC's) guidance. The CJTF and his staff maintain close coordination with the senior DOS representative in the AOR, as well as with other government agencies such as USAID and the US Information Service (USIS).

MISSION TERMINATION

Commanders should initiate planning for mission completion at the earliest possible opportunity. Although determining the parameters of the mission is part of the initial tasking, commanders should anticipate elusive, ill-defined mission completion criteria.

Commanders should engage civil agencies in developing mission completion criteria and ensure that clear guidelines are established with host nation agencies.

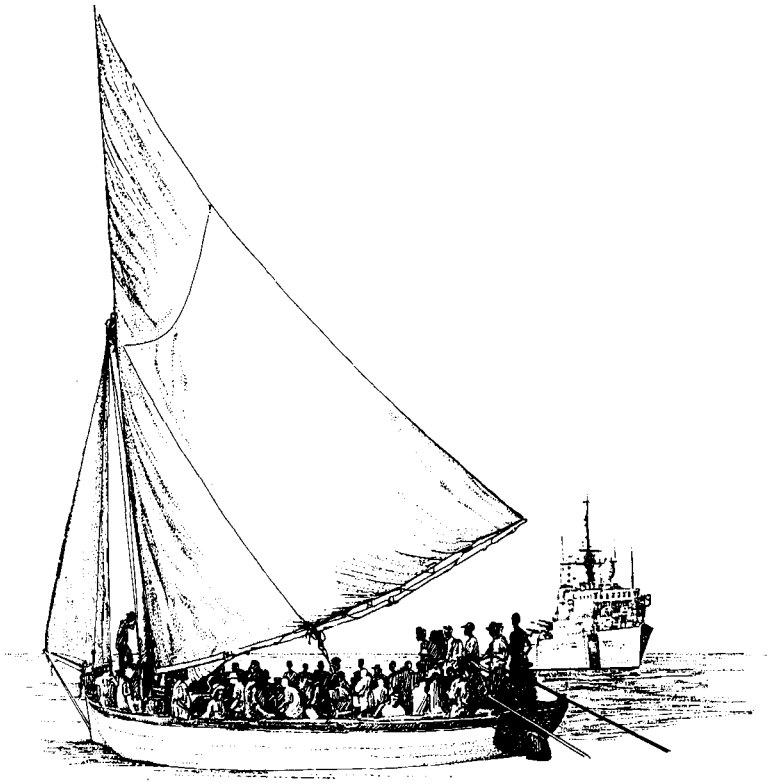

Chapter 2

STRATEGIC-LEVEL ROLES AND COORDINATION

This chapter discusses the roles and responsibilities of the principal governmental, civil, and military organizations involved in formulating HA responses in foreign nations. It includes an example of an interagency coordination process at the strategic level based on recent activities associated with presidential review. Interagency coordination requirements at the operational and tactical levels are discussed in Chapters 3 and 4. The information in this and subsequent chapters provides joint force commanders (JFCs), their staffs, and supporting unit commanders a basic understanding of governmental and civilian organizations and how they relate to the overall HA scheme. A basic understanding of these organizations should enhance the coordination process during HA operations.

STRATEGIC-LEVEL AUTHORITIES

Rarely can the resources and expertise of one US Government agency or department address the problems of all the participants in an HA operation. Therefore, true interagency coordination is essential for the effective development and implementation of policy. Such coordination is difficult because of differing budgetary authorities and the relative experience and competencies of the agencies involved. The complexity is compounded due to the imperative for intensive coordination at all levels of military engagement—strategic,

operational, and tactical. While the armed forces have developed doctrinal techniques and procedures to facilitate coordination within their structures, they often do not match or harmonize with the techniques and procedures used by other governmental, nongovernmental, and international organizations.

At the strategic level, the US authority begins with the NCA and continues through senior DOS and DOD representatives, with cooperation from other cabinet authorities and the total involvement of the supported and supporting combatant commanders. In UN operations, strategic-level planning is not as clearly defined. One of the challenges for US military planners at strategic levels is to determine when and with what other organizations to begin the coordination process.

NATIONAL AUTHORITIES

Authorities on the US national level include the NCA, the US Congress, DOS, DOD, other cabinet-level departments, and USAID. The NCA is supported in its decision-making process by the National Security Council (NSC) and in interagency coordination by the Administrator for USAID, who is the President's Special Coordinator for International Disaster Assistance.

National Command Authorities

The President and SECDEF form the NCA. The term *NCA* is used to signify constitutional authority to direct the armed forces to execute military action. Only the NCA can authorize movement of troops and execution of military action. By law, no one else in the chain of command has the authority to take such action.The NCA may direct relief operations when a serious international situation threatens the political or military stability of a region of interest to the US, or when the NCA deems the humanitarian situation by itself sufficient and appropriate for employment of the armed forces. The NCA issues its orders through the Chairman of the Joint Chiefs of Staff (CJCS) to the combatant commanders.

National Security Council

The NSC is the principal forum to consider national security issues requiring presidential decision. Its membership includes four statutory members—the President, Vice-President, Secretary of State, and Secretary of Defense. The CJCS and the Director of the Central Intelligence Agency serve as statutory advisors to the NSC. The President may appoint other advisors. By directive of 15 September 1993, the NSC designated the USAID Administrator as the Special Coordinator for International Disaster Assistance. The special coordinator (SC) performs his interagency coordination functions for the US in complex international emergencies through the interagency working group (IWG) which he chairs or cochairs with a representative of the NSC.

CABINET-LEVEL AUTHORITIES

Cabinet-level authorities consist of DOS, DOD, USAID, and other cabinet-level authorities.

Department of State

DOS or the US ambassador in country is responsible for declaring a foreign disaster or situation that requires HA. Usually, the ambassador declares a disaster based upon a request for assistance from the host country government and input from the US country team. The US ambassador in a given country has authority to declare a disaster in order to provide *immediate* relief assistance and start the process that may lead to increased US assistance.

To determine the policy for a particular relief operation, DOS may also lead an IWG in those cases not convened by the SC or NSC. DOS is organized in functional and regional bureaus. The key participating bureau is the regional bureau of the affected country and may include the bureaus of Refugee Programs, International Organizational Affairs, Political-Military Affairs, and Human Rights and Humanitarian Affairs (see Figure 2-1).

Department of Defense

The Under Secretary of Defense for Policy is the principal officer for policy coordination within DOD. He is responsible for developing the military policy for international HA and foreign relief operations. The Deputy Assistant Secretary for Humanitarian and Refugee Affairs proposes

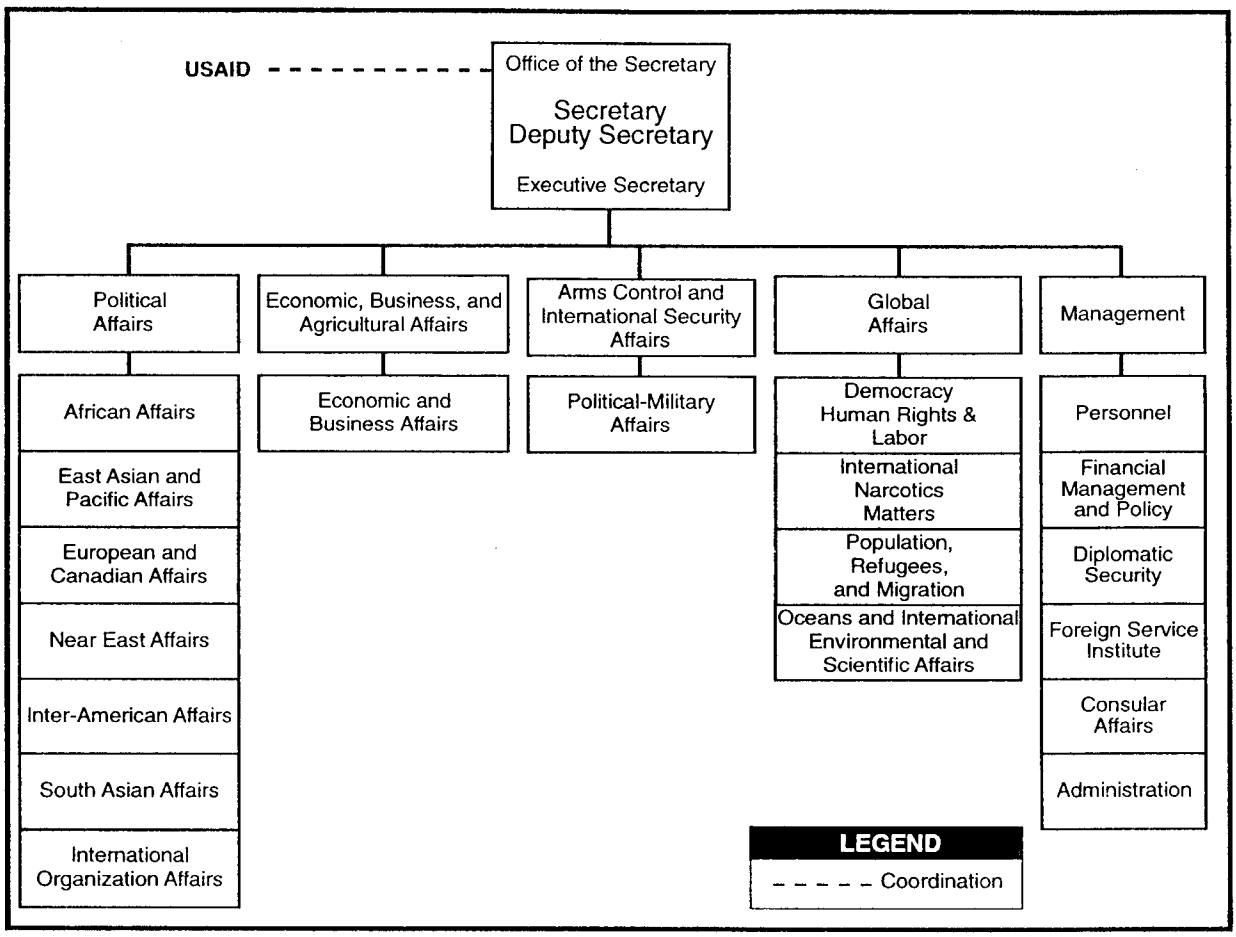

Figure 2-1. Department of State Organization

the policy and oversees the administration of existing statutory programs (see Figure 2-2). DOD officials participate in IWGs that the SC or NSC normally chair or cochair. DOD is represented in other IWGs on humanitarian emergencies that either it, DOS, or USAID may chair (see Figure 2-3).

Joint Staff

The primary joint staff-level proponent for HA policy is the Director for Strategic Plans and Policy, J5. In addition, the Director for Logistics, J4, through the logistics readiness center (LRC), oversees the execution of logistics support for HA operations that the services normally carry out.

The Director for Operations, J3, gets involved when a military force is to be inserted into the AO as a part of the US response to the crisis. Figure 2-4 depicts the organization of the joint staff and illustrates those directorates that interface to support HA.

> Enthusiastic cooperation by supporting unified commands was also critical to success. The Transportation Command's resident liaison officer effected much of the coordination for the strategic movement of coalition forces into the theater. Security assistance officers from US European Command and US Pacific Command, as well as defense attaches worldwide, received and responded to a USCENTCOM-developed questionnaire requesting critical posture and support requirements data.
>
> Operation Restore Hope—A USCENTCOM Perspective

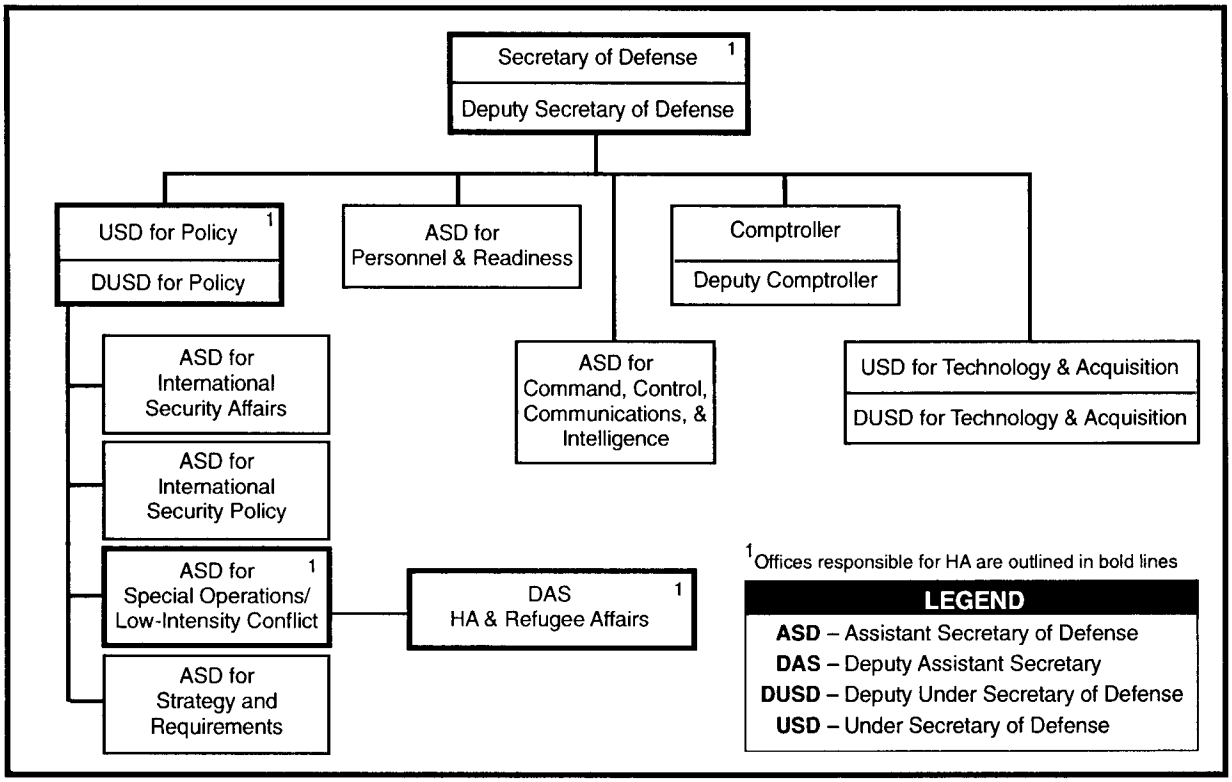

Figure 2-2. Department of Defense Organization

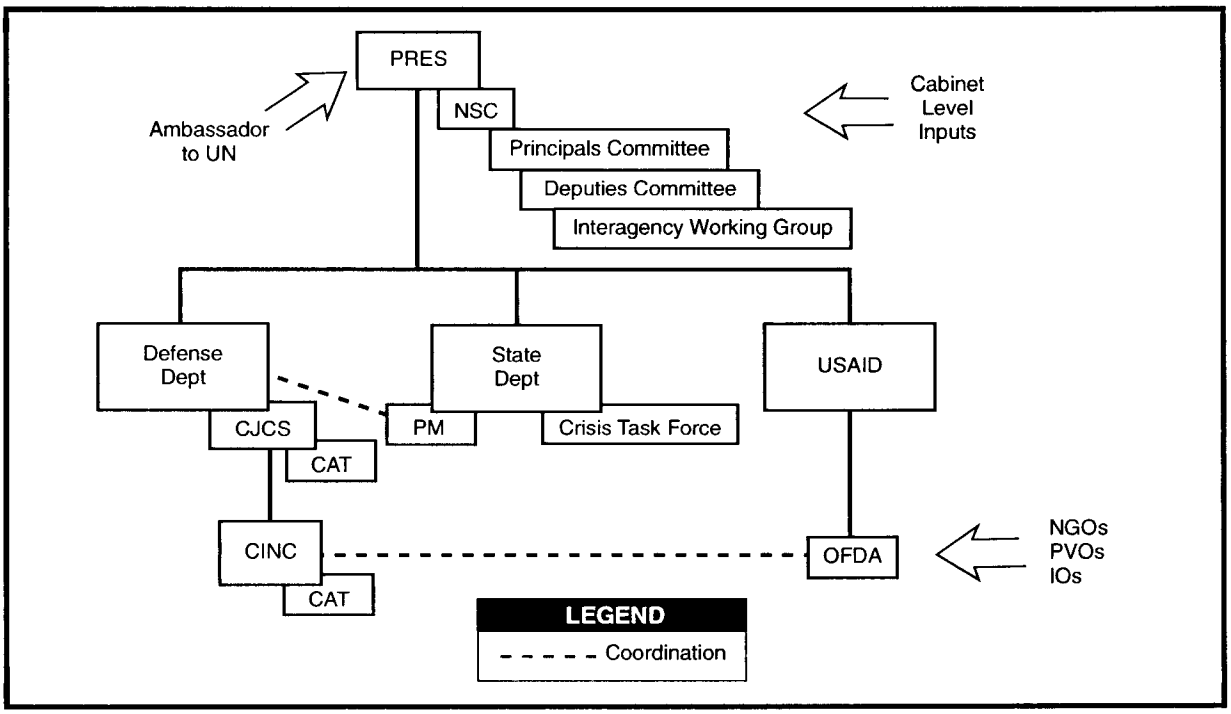

Figure 2-3. Strategic-Level Interagency Coordination Process

The joint staff is responsible for designating the supported and supporting commands for any operation, including HA missions. Once the relationships of supported and supporting CINCs have been established, detailed coordination at the staff level will progress.

Agency for International Development

USAID plays an important role in providing HA. Although not directly under the control of DOS, USAID coordinates activities at cabinet and country team levels. Its efforts are executed in three phases—relief, rehabilitation, and reconstruction.

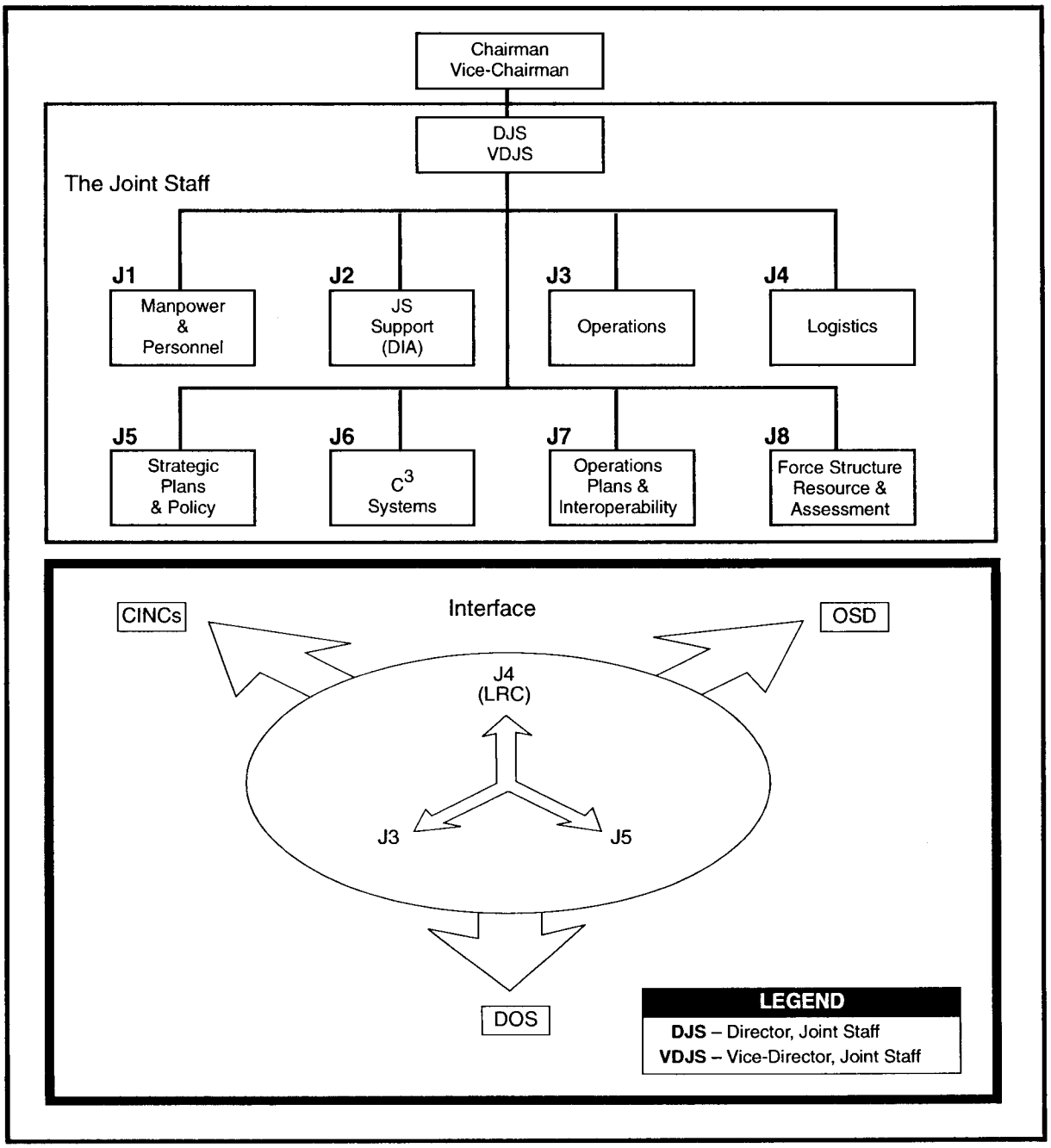

Figure 2-4. Joint Staff Interface for HA

The USAID organization for HA is shown in Figure 2-5. Relief is usually coordinated under the auspices of the Bureau for Humanitarian Response. The bureau coordinates its efforts through OFDA. This office, discussed in detail in Chapter 3, participates in planning at the operational level.

Other Cabinet-Level Authorities

NSC and DOS have the authority to augment the IWG by requesting required expertise from cabinet-level offices. Cabinet-level representation depends on the nature of the operation under consideration. The Departments of Agriculture, Treasury, and Transportation (DOT); the Office of Management and Budget; and the US Information Agency may play a role in the development of the strategic plan. For example, the Coast Guard, as an agent for DOT, has capabilities that can significantly enhance joint HA efforts. These include maritime search and rescue, port safety and security, marine environmental response, maritime refugee processing, maritime interception force operations, and law enforcement on navigable waters.

COORDINATING AUTHORITY

Interagency coordination parameters begin at the strategic level. For greatest effectiveness, coordination must begin at the first signs of a developing complex emergency. Above all, successful coordination involves comprehensively engaging all the organizational and functional tools at the appropriate points and places on the disaster time line in order to deal with the crisis.

Response Triad

Each HA situation is unique and requires a unique response. Three essential elements—political, military, and humanitarian—are present whenever HA is provided. The critical coordination of these elements can be portrayed as a response triad, as illustrated in Figure 2-6.

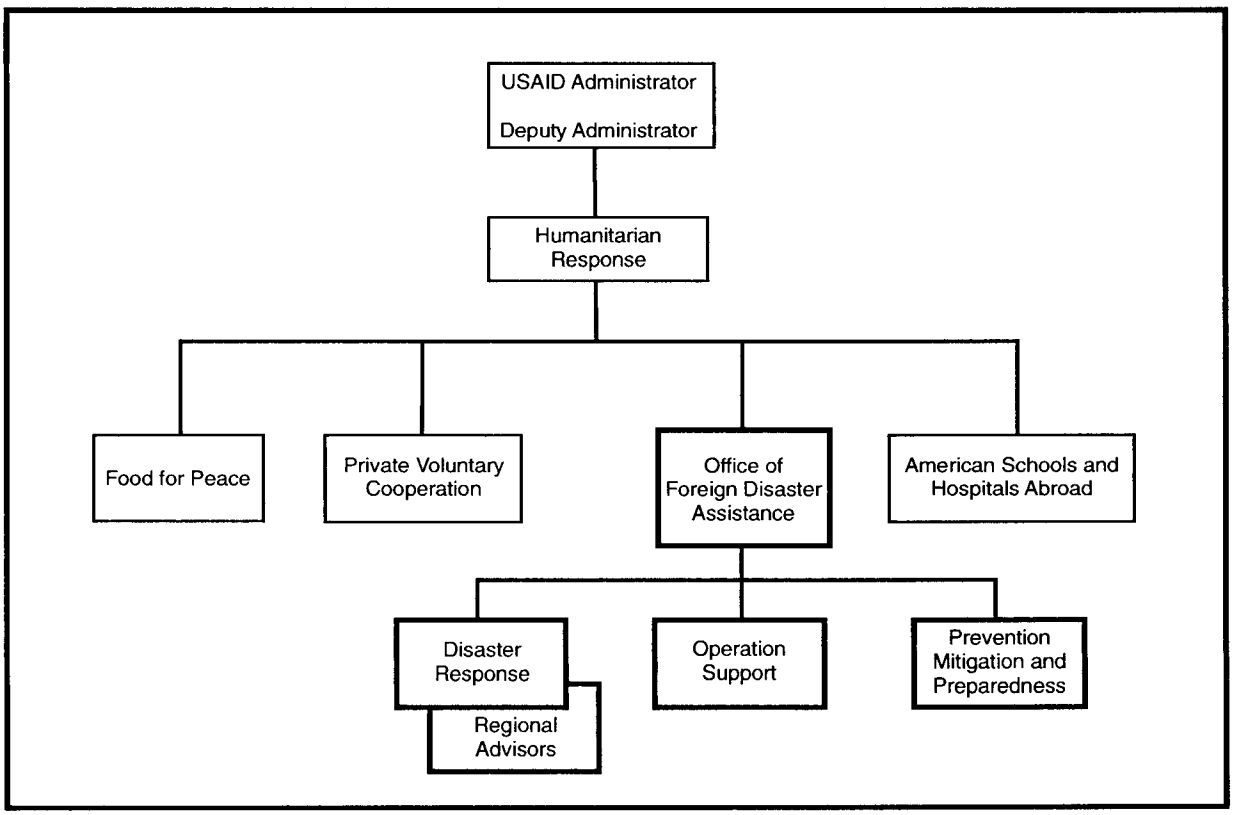

Figure 2-5. USAID Organization for HA

> USCENTCOM had to overcome the challenges of coordinating with a variety of civilian agencies. The Department of State formed the Government Interagency Task Force, Somalia to coordinate the US Government response to the crisis. Near-continuous communication between the joint staff and USCENTCOM served as the primary means of ensuring the unified commander's position received consideration in interagency policy discussions.
>
> Operation Restore Hope—A USCENTCOM Perspective

Commanders of a large-scale HA must carefully balance these essential elements to ensure success. Each element complements the other two and each must be represented at every level of HA, from policy making to distribution of relief supplies in the field.

US governmental, civil, and military authorities; other governments; the UN; and NGO, PVO, and IO relief agencies share responsibilities for the conduct of humanitarian relief operations. With so many organizations involved, planners at the strategic and operational levels may encounter problems because the strategic plans and goals of these organizations may not be compatible with military objectives.

An effective response can be described as a triad at both national and international organizational levels. The components of such a triad are humanitarian, political, and security organizations. Effective US action in such an environment necessitates strong central coordination and leadership and should include interface with NGOs, PVOs, and IOs. The diverse participants compound the complexity of an operation. Appendix C discusses organizations that may be found in an AO conducting HA operations.

Special Coordinator for International Disaster Assistance

Through the NSC directive of 15 September 1993, the USAID Administrator plays the major interagency coordinating function for the US Government in his designated capacity as the President's Special Coordinator for International Disaster Assistance. The principal

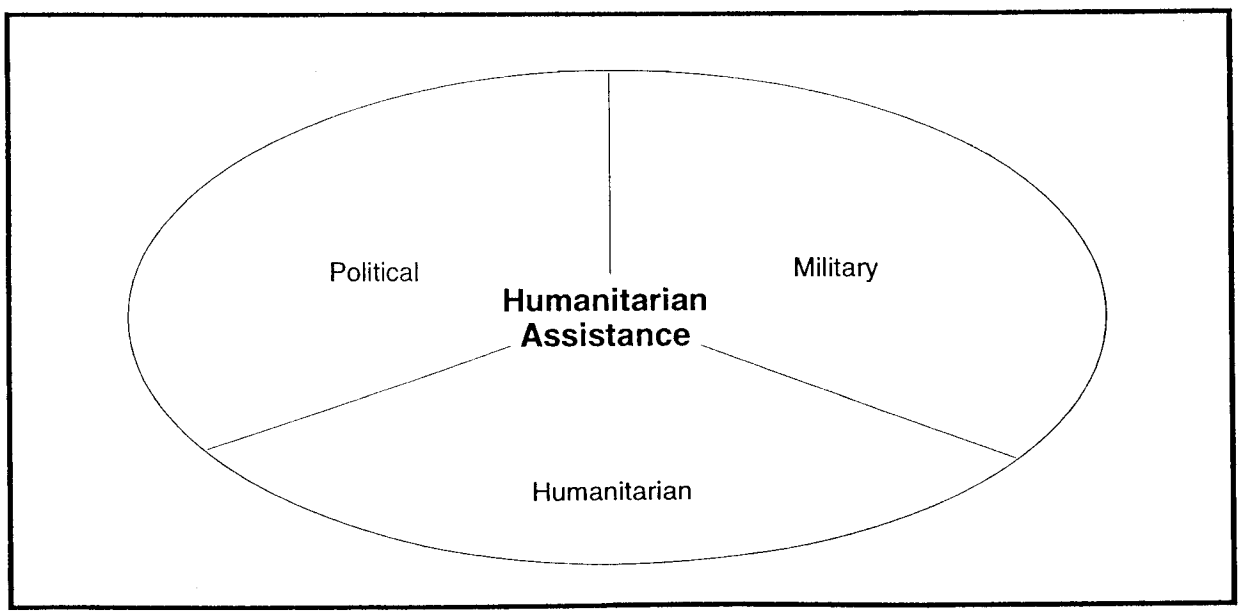

Figure 2-6. Elements of the Response Triad

staff backup for discharging this central coordinating function is OFDA.

When the NCA determines that a US response to a complex emergency may be required, the SC may be directed to convene an appropriate IWG to recommend the policy and actions that should be followed. The IWG merges information received from all appropriate cabinet-level representatives, to include the US ambassador to the UN, regional organizations, and the US ambassador or chief of the mission. The ambassador or chief of mission will usually gather input by consulting with the country team.

The IWG immediately develops an information collection plan and tasks all sources to implement the plan. The unified commander is an important source who will modify his own collection plan to support the requirement created by the complex emergency. This information is usually communicated through the country team but also follows channels through the CJCS to the DOD representative on the IWG. Another potential source is the political advisor assigned to the CINC who can link directly with the DOS representative on the IWG. Figure 2-3 depicts the interagency coordination process at the strategic level.

Interagency Planning

Concurrently, the IWG develops a comprehensive strategy and plan of operations with tasks for each of the key participants. Key to the development of a sound strategic plan is the inclusion of all elements that should be involved in the crisis. The SC must ensure the integrity of this comprehensive process. In addition, to ensure a coordinated approach, the unified commander needs to consider how to integrate ongoing in-country programs under Title 10 authorities.

Key to the development of sound recommendations is including other elements that may be involved in the crisis. For example, DOS should consider the involvement of USAID, UN organizations, and NGOs, PVOs, and IOs that may be operating in the country. Various organizations may establish a crisis task force or crisis action team to manage the situation.

The difficulties in integrating strategic, operational, and tactical-level planning with the diverse mixture of other organizations involved can be minimized through an active interface role of the SC. The SC needs to facilitate the links between the military and those organizations whose structures and procedures are not as formally defined as those of the military. The SC is responsible for coordinating these planning and operational interfaces throughout the life cycle of a complex humanitarian emergency.

INTERNATIONAL AUTHORTIES

Integration of strategic, operational, and tactical-level planning with other organizations involved in the HA operation is difficult. The main reason for this difficulty is that other organizational structures are not as defined as those in the military. As a result, no comparable match exists to that of the US military system.

This does not mean these organizations do not have a chain of command. Planning follows the concepts contained in each of their charters and often takes place on all levels. Further, some UN agency charters can be interpreted to have overlapping mandates. The organizations also tend to tailor their support to the crisis and, as a result, their network is more *ad hoc* than that found in a traditional military organization. For this reason, experience shows that relationships with organizations mature as an operation develops, and these relationships and linkages require constant nurturing. The roles and responsibilities of the organizations discussed below should provide military planners with the requisite knowledge to develop the interagency linkages needed to assure the success of an operation.

UNITED NATIONS

The UN is involved in the entire spectrum of operations, ranging from prevention to relief,

through reconstruction and rehabilitation, to development. Usually, UN relief agencies establish independent networks to execute their humanitarian relief operations. Although the UN system seems to delegate as much as possible to the agency elements located in the field, a supervisory and support network can be traced from the UN headquarters to field officers.

A relief operation may occur due to man-made or natural causes. Although the UN may be involved in HA operations without a resolution from the Security Council or the General Assembly, the type of operations envisioned will probably be launched under the auspices of an approved UN resolution.

The UN organization for complex emergencies normally includes headquarters and field components. The UN Under Secretary General for the UN Department of Humanitarian Affairs (UNDHA), as the UN emergency coordinator, normally serves as the headquarters component. Field-level organization currently relies on the resident coordinator system administered by the UN Development Program (UNDP). The resident coordinator mobilizes and manages the UN country team and provides direction for the field relief effort. In most serious emergencies, the UN Secretary General may appoint a special representative who reports directly to the Secretary General on all matters but also to the UN emergency coordinator (UNDHA) on humanitarian matters.

Many UN staff elements may get involved in the provision of humanitarian relief. Planners must understand the differences between the two major arms of the UN that participate in HA. The UN organization in New York deals with issues of policy and international security. Additionally, this arm maintains the command and control center that coordinates UN peace operations around the globe.

The UN organization in Geneva, on the other hand, deals specifically with HA. Although the involvement of UN staff elements is governed by the specifics of the situation, UNDHA is generally held responsible for coordinating HA at the equivalent US military strategic level. Strategic and operational planners should consult representatives of this UN department when developing recommendations for the involvement of US military forces. This consultation may take place through USAID/OFDA rather than through direct UN-DOD/unified command interface.

United Nations Objectives

Military commanders of HA forces must have a working knowledge of the aims and objectives pursued by the UN organizations in the AO. This knowledge is essential during the planning process to reconcile the objectives of the military plan with UN HA objectives. These broad objectives are—

- To keep the emergency from happening, or when an emergency threatens, to mitigate its effects.
- To minimize human casualties and destruction of property by ensuring the survival of the maximum number of victims through effective relief actions.
- To reestablish self-sufficiency and essential services as soon as possible for all affected populations, with special attention to the most vulnerable segments such as children, the disabled, and the elderly.
- To ensure that relief action promotes and does not impede rehabilitation and longer-term development efforts. Activities should contribute to long-term development goals.
- To protect the main effort and humanitarian relief implementers through judicious use of the security component of the triad.
- To find durable solutions as quickly as possible, with special attention to displaced and affected populations, while assuring protection and assistance in the process.

United Nations Peacekeeping

Traditional UN peacekeeping operations (PKO) take place around the globe, where over 70 nations have contributed more than 75,000 troops. US military forces may conduct HA simultaneously or in coordination with a UN PKO. Therefore, commanders and staffs should understand success factors for UN PKOs and apply them to HA, particularly in the mission-

planning stages. Analysis indicates that for UN PKO to be successful—

- Peacekeeping forces must have the support of all belligerent parties.
- Presence of the peacekeeping force must be tied to ongoing efforts for a negotiated settlement of the dispute.
- Hostile parties must be separated and substantially disarmed.

In addition, operations that do not meet these PKO success factors will have an even higher probability of failure when the following conditions exist:

- The mandate is ambiguous or unclear.
- The terrain is poor.
- A clear cease-fire line does not exist.
- Troops are deployed to cities.
- Weapons are readily available.
- The UN PKO chain of command is poorly disciplined..

United Nations Response

The UN system is often called upon to assist the affected governments with large-scale relief operations. The level of assistance and its effectiveness depend largely on the coordination efforts at both the international and country levels. The nature of the emergency also plays a large role in determining the specific support required. UN prevention and response can also be categorized as a triad of humanitarian, political, and security components analogous to the US triad mentioned earlier. See Appendix D for more detailed descriptions of UN agencies that support HA.

OTHER INTERNATIONAL ORGANIZATIONS

Outside of the UN, the primary international organizations participating in HA involve groupings of the Red Cross/Red Crescent Movement. It is critical to point out that these groups are *distinctly different* and have separate mandates and staff organizations. They should not be considered as one organization.

International Red Cross and Red Crescent Movement

Three Red Cross organizations make up the International Red Cross and Red Crescent Movement: the International Committee of the Red Cross, the International Federation of Red Cross/Red Crescent Societies, and the individual national Red Cross and Red Crescent organizations. The objective of the movement is to coordinate their entire range of activities. For example the statutes of the movement give the ICRC some flexibility in situations not covered by the Geneva Conventions. Figure 2-7 depicts the relationships within the movement.

Neutrality is a vital aspect in the involvement of any Red Cross or Red Crescent organization in HA. Their objective is to protect their neutrality in reality and in perception. The protection of this neutrality is a key consideration for joint military planners and operators.

International Committee of the Red Cross. The ICRC is *international* only in the sense of its worldwide operations; it is essentially all Swiss. The ICRC works for the application of the provisions of international humanitarian law in armed conflicts and undertakes tasks incumbent upon it under this law. Founded in 1863, this international organization is based in Geneva and derives its mandate from the Geneva Conventions of 1949 and the two additional protocols of 1977.

The ICRC is distinct from the rest of the movement in that it has a protection mandate in addition to its relief assistance work. It acts principally in cases of conflict, ensuring legal protection for victims and acting as a neutral, independent humanitarian player in the most complex emergency situations. At times the ICRC may get involved in strictly humanitarian operations, but its mandate is to function during armed conflict.

International Federation of Red Cross and Red Crescent Societies. This organization was formed in 1919 and consists of the National Red Cross or Red Crescent Societies that normally operate within the borders of their own countries. The mandate of the federation is to provide humanitarian relief during

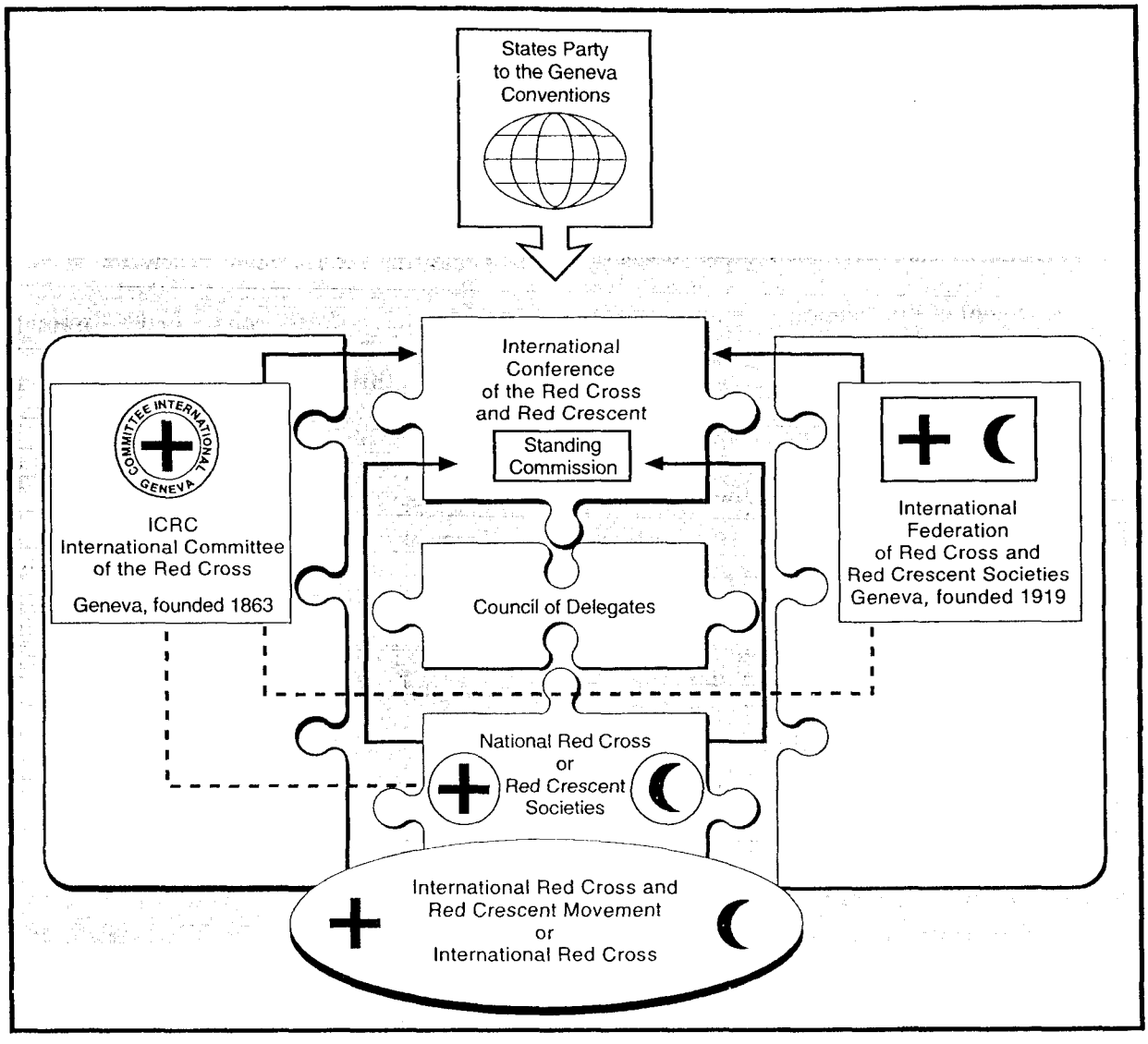

Figure 2-7. International Red Cross and Red Crescent Movement Relationships

disasters. Red Cross and Red Crescent organizations may provide assistance to other federation members through their international alliance provisions.

National Red Cross and Red Crescent Societies. The National Red Cross and Red Crescent Societies are created by countries to provide for humanitarian relief within their own borders.

International Organization for Migration

The International Organization for Migration (IOM) performs three primary missions:

- The processing and movement of refugees to countries offering them resettlement opportunities.
- The provision of orderly and planned migration to meet emigration and immigration requirements of losing and gaining countries.
- The transfer of technology through the movement of qualified human resources to promote economic, educational, and social advancement of developing countries.

The IOM has demonstrated a strong competence in capacity-building for indigenous governments and NGOs. Namely, it conducts interactive training workshops to increase

knowledge of disaster management and build teamwork for interagency preparation and response for complex emergencies.

NONGOVERNMENTAL AND PRIVATE VOLUNTARY ORGANIZATIONS

The JTF may find many NGOs and PVOs in the AO. Over 350 agencies, many of which are capable of responding in HA operations, are registered with USAID. Some foreign-based organizations are not required to register in the US. USAID publishes a yearly report[1] that describes the aims and objectives of the registered organizations. This report should be part of the combatant commander's library. Appendix C contains a description of NGOs and PVOs that have disaster-relief field experience. Disaster assistance evolution will likely expand the number of NGOs and PVOs in the future.

NGOs and PVOs, as they are known in North America, are organizations, both national and international, that are constituted separately from the government of the country in which they are founded. They range from multimillion dollar organizations with decades of worldwide experience in disaster relief to newly created small organizations, dedicated to the particular disaster in question.

Military commanders and other decision makers should understand the following key elements about the NGO and PVO community:

- Military interactions with the NGO and PVO community should be coordinated with the US country team, particularly OFDA disaster assistance response team (DART) representatives.
- The characteristics, missions, and capabilities of individual NGOs and PVOs are diverse. All are involved in direct humanitarian aid with host populations. Each organization operates individually.
- NGOs and PVOs provide the bulk of HA at the grassroots level. The military structure can provide logistics and security assistance to remote and unsecured areas.
- NGOs and PVOs may operate in areas of high risk, where other organizations are hesitant to go.
- NGO and PVO assessments are often an excellent source of information on the HA situation.
- NGOs and PVOs are funded primarily by donations from the public as well as governments and the UN. They may have scarce resources, both at the donor level and in the field.
- NGOs and PVOs will probably operate in the affected area long after the military leaves. Therefore, military commanders should consider the implications of any US military HA projects they initiate in the field.

1. *Voluntary Foreign Aid Programs*, 1994.

Chapter 3

OPERATIONAL-LEVEL ROLES AND RESPONSIBILITIES

This chapter describes military and nonmilitary agencies involved at the operational level of HA operations. Notional coordination frameworks are provided to illustrate potential connectivity at the operational level. Additionally, the strategic elements the CINC considers to organize his HA joint task force are presented as linkages to operational focus.

Readers will develop an understanding of how policy guidance leads to mission statements, implied tasks, and plans of action for both military and civilian agencies. With better understanding of these matters, action agencies and staffs can improve interoperability at their level. Military planners must be aware of the interagency operations associated with HA relationships and their impact on policy formulation.

THE UNIFIED COMMAND

The military's operational-level organization is the *unified command,* which is responsible for a region known as a *theater of operations.* The CINC establishes the operational objectives needed to transform national-level policy and guidance into effective HA operations. The CINC provides authoritative direction, initiates actions, sequences events, and applies resources to bring about and sustain the military contribution to HA.

SHAPING THE MISSION

Developing the HA military mission statement is a difficult but critical task for the CINC and his staff. The strategic mission statement should aim for an understandable and achievable strategic end state, even for a short-duration operation. The mission statement is normally coordinated through an interagency process that the CINC formulates with the assistance of USAID/OFDA.

During Operation Restore Hope in Somalia, USCENTCOM was the unified command. It provided guidance and arranged support and resources for the operational commander. The commander of the 1st Marine Expeditionary Force (I MEF) commanded a JTF/CTF composed of air, naval, Marine, Army, and special operations forces (SOF) components, in addition to the forces provided by countries contributing to the US-led, combined coalition.

As the responsible unified command, USCENTCOM performed numerous tasks contributing to the success of Operation Restore Hope. Key areas included shaping a clear, achievable mission statement for the operational commander, shaping an international coalition, and orchestrating the transition to eventual UN control.

Based on Operation Restore Hope—
A USCENTCOM Perspective

Mission Statement

Some key considerations in developing a mission statement include—

- Higher strategic direction.
- The desired end state.
- Security of the operation.
- Military assistance to USAID/OFDA and NGOs, PVOs, and IOs.
- Use of CA units.

The military command must have a clear and achievable statement so that the many participating military units can be tasked. The USCENTCOM mission statement for Operation Restore Hope is one example.

> When directed by the NCA, the commander in chief, United States Central Command (USCINCCENT) conducts joint or combined military operations in Somalia to secure the major airports and seaports, key installations, and food distribution points; to provide open and free passage of relief supplies; to provide security for convoys and relief organization operations; and to assist UN NGOs in providing humanitarian relief under UN auspices.

Desired End State

The HA mission should produce a desired end state collaborated by strategic-level political, military, and humanitarian (response triad) participants. Whenever possible, the desired end state should be known before US forces are committed. However, this may not be possible. If the desired end state is not known and US forces have deployed, the unified commander may be required to formulate one. The concept of operations may include the desired end state and be used to develop the following:

- Measures of effectiveness (MOEs).
- Phases of the operation.
- Information used to transition JTF responsibilities to other forces, organizations, or governing bodies.

Mission Creep

Military forces will undoubtedly receive numerous requests to perform additional tasks, as was the case in Somalia. The UN, for example, wanted the multinational force to expand its operation beyond the area of greatest need to establish a presence in the northern part of the country. The UN also pressed the force to begin disarming factional militia.

These tasks represented the phenomenon labeled *mission creep*. In essence, due to political agendas, key participants in the operation sought to expand the unified task force (UNITAF) activities and AOs beyond the initial, carefully limited scope of securing the environment for humanitarian relief operations. USCENTCOM had to work through the

interagency coordination process to respond to the mission creep tendencies.

> The mission creep phenomenon underscores the importance of developing a definitive mission statement early on—a statement that ensures parties involved understand the limits of the commander's charter. The phenomenon also points out the difficulty of achieving consensus when other agencies with key roles in the operation have differing views of the desired end state....CINCCENT exercised patience and pragmatism in overcoming these attempts to change his mission without NCA directive.
>
> Operation Restore Hope—A USCENTCOM Perspective

SUPPORTING HUMANITARIAN ASSISTANCE

The unified CINC for the affected region is responsible for developing the military response to HA operations. In addition to the Title 10 responsibilities (see Chapter 1), the CINC may create a JTF to accomplish the HA mission. Once the CINC decides to organize a task force to execute an HA operation, he may organize and send a humanitarian assistance survey team (HAST) to the operational area to acquire information necessary to develop a clear mission statement and plan for the operation. He may also opt to establish offices at his headquarters to administer the unique requirements of HA. These could include a humanitarian assistance coordination center (HACC) or similar crisis action organization to assist the CINC in planning and executing the operation, a logistics operations center (LOC), and a liaison section.

Humanitarian Assistance Survey Team

Assessment is a fundamental task for providing effective disaster relief and HA. The HAST deploys to the area of responsibility (AOR) to assess the existing conditions and the need for follow-on forces. Normally, the CINC deploys the HAST, which is made up of personnel from staff sections appropriate to the mission. If possible, the HAST leader coordinates with other staff sections prior to deployment to determine relationships and responsibilities. Additional details on situation and needs assessments is provided in Appendix E. The HAST should—

- Conduct reconnaissance to determine the nature and extent of the food and water supply; loss of life, injury, and illness; numbers of displaced persons; disruption of the government; presence of medical representatives; status of communications and facilities; and destruction of property and infrastructure.
- Formulate recommendations on HA missions and desired capabilities.
- Establish liaison and coordinate assessments with host nation agencies, supported commanders or their representatives, US diplomatic personnel, and other relief agencies.
- Arrange for the reception of US personnel, supplies, and equipment in concert with the US Transportation Command (USTRANSCOM).

In emergency cases, to relieve suffering and life-threatening situations, the CINC can direct the HAST to begin HA-type missions. In such cases, the CINC and his staff identify relationships and authority with the host nation, embassy, and USAID personnel. Such emergencies require specific support arrangements for the delivery of food and medical supplies (NGO, PVO, and IO materials or military supplies). Prior to deployment, the CINC and his staff provide the HAST with the following:

- Current HA operations.
- A threat assessment, to include any medical threats.
- Mapping, charting, and geodesy support.
- Terms of reference for HA operations.
- Persons to contact at embassies and DOS before contacting relief agencies.
- PA guidance.

Logistics Operations Center

Logistics support requirements vary, depending on the magnitude of the operation

and the type and amount of relief the host country requests. The LOC is the point of contact for implementing a timely and flexible logistics response for the CINC. This response includes alerting key logistics agencies, locating and releasing required supplies, moving supplies to departure airfields and seaports of embarkation, and delivering supplies to the required area.

Movement of initial relief supplies and equipment is, in most cases, accomplished by airlift resources. These movements should include the coordination of types of supplies and arrival times with other US and foreign agencies involved in the effort. The LOC is also responsible for planning and coordinating aspects of force deployment and sustainment operations.

Coalition Unit Liaison Elements

In conjunction with US operations, other nations might deploy military forces to operate with the JTF. Some coalition units may provide liaison elements at the CINC as well as the JTF level.

Humanitarian Assistance Coordination Center

The CINC may establish an HACC to assist with interagency planning and coordination. Staffing for the HACC should include a USAID and OFDA advisor/liaison officer who serves as the HACC director, an NGO/PVO advisor, a CA officer, a legal advisor, a PA officer, and other augmentation as required. The HACC provides the link among the CINC, USAID and OFDA, NGOs and PVOs, and other agencies that might participate.

Each CINC will establish an organizational structure to meet the humanitarian needs of that particular theater and operation. USCENTCOM established an HACC within the J5 Politico Military Division at the headquarters level to support Operation Restore Hope.

An example of an operational-level unified command, with appropriate sections unique to HA, is shown in Figure 3-1.

The HACC's mission was to provide Operation Restore Hope coordination and liaison between HQ, USCENTCOM and NGOs, PVOs, and IOs. The HACC assisted with US interagency planning and implementation of humanitarian assistance activities in Somalia, including the transition to UN control. The HACC helped facilitate the timely interagency staffing of actions regarding NGO, PVO, and IO (UN) concerns that were elevated to the international/headquarters level. The HACC also served a unique advocacy role, supported by its interagency staffing, by being able to represent both military-specific as well as NGO- and PVO-specific issues and concerns.

FORMING A JOINT TASK FORCE

Based on the size and nature of HA operations, a CINC may designate a JTF to conduct the military's operation. Creating a JTF is one option available to a CINC. This paragraph provides an overview of a typical JTF headquarters staff and addresses CINC-level considerations in organizing the JTF and in selecting specialized forces for an HA response.

The CINC develops the HA mission statement and concept of operations based upon the direction of the NCA. Input—including requests from USAID/OFDA, situational factors (crises caused by man, weather, volcanic, or seismic activity), and the time military forces enter the disaster area—affects the mission statement. The CINC develops a list of requisite capabilities, based upon analysis of the foregoing, and tasks his components to identify forces for a specified set of capabilities. The components establish a force list (personnel, equipment, and supplies) with associated movement requirements. The CINC approves or disapproves the components' force lists,

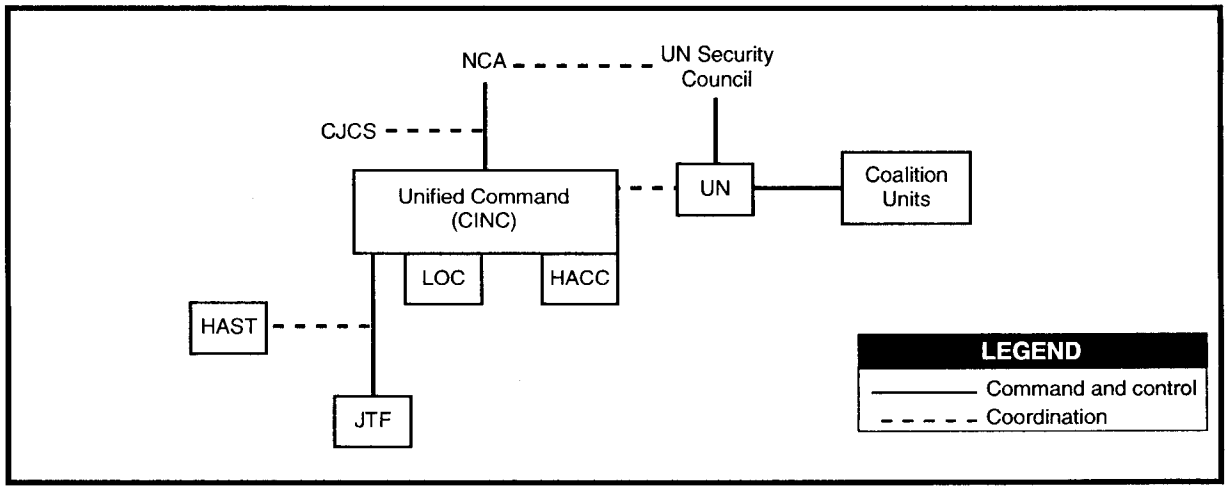

Figure 3-1. Unified Command Structure

establishes the JTF headquarters, and assigns approved forces to the JTF.

Where one commander may choose to use a JTF to accomplish a given mission, another may choose an alternate course of action; however, JTFs are ideally suited to perform the HA mission. They are successful due to the adaptive nature of their command and control organization, the unique capabilities of service components, and the ability to quickly deploy personnel and equipment to execute any number of diverse HA missions.

The JTF may be a two-tier command, which simplifies the chain of command between the CINC and JTF commander and minimizes potential confusion and logistics problems that could surface during joint force operations. The CINC determines the command relationships for the JTF. This command relationship may include a subunified commander or a service component commander who, based on CINC guidance, establishes a JTF.

The CINC establishes the JTF when the mission has a specific limited objective and does not require overall centralized control of logistics. The mission assigned a JTF requires execution of responsibilities and close integration of effort involving two or more services. The JTF is dissolved when the purpose for which it was created is achieved. Joint Pub 3-0[1] provides general guidance relating to joint operations and Joint Pub 5-00.2[2] discusses the JTF. Joint Pub 4-0[3] provides general guidance for logistics support of joint operations.

To enhance coordination and execution, the JTF commander may define various geographical AOs under the operational control of a component commander or a particular nation's forces as in the case of multinational operations. Chapter 4 contains details concerning administration and operation of geographic areas.

Organization

The JTF organization resembles traditional military organizations with a commander, command element, and forces required to execute the mission. The primary purpose of the JTF headquarters is command, control, and administration of the JTF. During HA operations, the JTF headquarters must provide the basis for a unified effort, centralized direction, and decentralized execution. Unique aspects of the HA mission compel the JTF headquarters to be especially flexible, responsive, and cognizant of the capabilities and limitations of the components

1. *Doctrine for Joint Operations*, September 1993.
2. *Joint Task Force Planning Guidance and Procedures*, September 1991.
3. *Doctrine for Logistics Support of Joint Operations*, September 1992.

of the JTF. Additional and specific functional areas may be added to the JTF headquarters as necessary. See Figure 3-2 for a typical HQ JTF staff organization. Areas that may be augmented by additional personnel include—

- Staff judge advocate (SJA).
- PA.
- Health services.
- CA.
- Nuclear, biological, chemical (NBC).
- Meteorology and oceanography (METOC).
- Communications.

Staff Judge Advocate. HA operations present unique requirements in regard to international and operational law. SJAs may be required to have expertise regarding—

- Refugees.
- Displaced and detained civilians.
- Rules of engagement.
- Psychological operations (PSYOP).
- Medical support.
- Laws of war.
- Civil affairs.
- Local cultures and customs.
- Government and international laws and agreements.
- Military-political liaison.
- Claims and contingency contracting.
- Humanitarian operations center (HOC) and civil-military operations center (CMOC) operations.

Consistency of legal advice is imperative. Attorneys from coalition forces should be integrated into the planning and relief effort at all phases of the operation. See Appendix B for additional information on legal issues.

Public Affairs. In most HA operations, the JTF establishes a joint information bureau (JIB) to coordinate the release of information and news media requests for information. JIB personnel provide command information (internal information) on the activities of US military personnel engaged in HA operations and facilitate civilian news media representatives in their coverage of JTF activities. Additionally, JIB personnel offer training in media relations for commanders, staffs, and other JTF personnel. The JIB prepares and executes the JTF PA strategy. This strategy serves the public's right to be informed while minimizing risks of disclosing

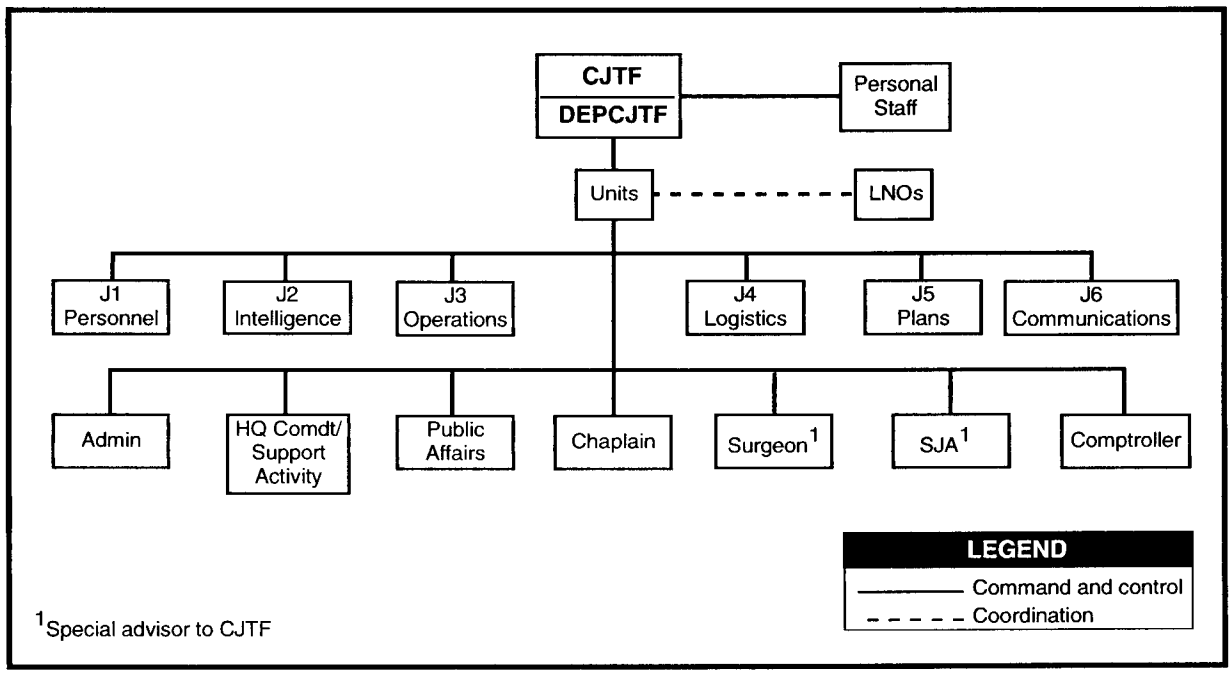

Figure 3-2. Typical HQ JTF Staff Organization

unauthorized information through effective security at the source.

PA supports the policies of maximum disclosure with minimum delay; open and independent reporting; and full and balanced coverage of operations. PA provides factual information on all aspects of the operation. A good PA plan fulfills the military's obligation to keep the public informed, minimizing the risk through security at the source and operational security awareness.

Staff Surgeon. The surgeon is a critical JTF staff member during HA efforts. HA missions are often conducted in areas where the biggest enemy is disease. The JTF surgeon's advice is critical for the commander to protect the force and determine relief requirements.

Special Staff Sections. The JTF commander may establish additional sections within the JTF to emphasize important functions such as coordination, logistics, security, and liaison. Chapter 4 elaborates on the tasks and functions of these sections. Sections tailored for HA include the coalition liaison section, the CMOC, and the LOC.

Coalition Liaison Section. This section is developed within the JTF. Its primary purpose is to coordinate and manage the high volume of military contributions offered by various countries. This responsibility may be assigned as an additional duty within the J3 section.

Civil-Military Operations Center. This section is discussed in detail in Chapter 4.

Logistics Operations Center. If formed, the LOC has the additional duty of tracking and managing coalition forces logistics needs and coordinating logistics management and flow with other agencies in the operation.

Special Operations Forces. SOF have capabilities well suited to the requirements of HA operations. However, their capabilities are often misunderstood. Certain SOF are well qualified to assist in US Government-sponsored HA activities in remote areas, especially in a conflict environment. SOF teams are adaptable and capable of operating effectively in remote areas and urban areas isolated by disaster events. The teams may be able to provide detailed reports and assessments on conditions in the area. They deploy rapidly, have excellent radio communications capabilities, and work well with indigenous ethnic groups.

If SOF are assigned to the JTF, the CINC must clearly delineate their roles, missions, and functions. SOF have two inherent disciplines that can best be applied toward HA requirements: CA and PSYOP. CA units, PSYOP forces, and Army Special Forces operational detachments-A (SF ODA) comprise the SOF team.

Civil Affairs Units. Army CA units are special operations forces. They are designed to perform a variety of functional area skills to support HA. Most CA units are in the reserve components and thus require a presidential call-up. These units are organized to provide support to all levels of government. Reserve CA personnel routinely perform their functional area skills as part of their civilian jobs. This working knowledge is especially useful in assisting civil governments and their citizens in disasters.

The units' functional specialty capabilities are normally tailored to particular situations. They assess the damage to the civil infrastructure, assist in the operation of temporary shelters, and manage a CMOC. CA units also serve as liaison between the military and local relief organizations; PVOs, NGOs, and IOs; the UN; and OFDA DART.

CA units are usually attached to the various maneuver commanders assigned to the JTF. When the JTF is employed, CA units establish and maintain relations between the JTF and host nation populace and authorities, as well as with NGOs, PVOs, and IOs. Establishing and maintaining military-to-civil relations may include interaction among US, allied, and indigenous security forces; the host nation; and NGOs and PVOs.

CA units can provide the JTF with expertise on factors that directly affect military operations in foreign HA. These factors include—

- Host nation agencies and other civil centers.
- Ethnic differences and resentments.
- Linguistic regions and subregions.
- Social structures (familial, regional, generational).
- Religious and symbolic systems (beliefs and behaviors).
- Political structures (power distribution and entrenchment).
- Economic systems (sources and distribution of wealth).
- Linkages among social, religious, political, and economic dynamics.
- A cultural history of the area.
- Historic relations with the west.
- Attitudes toward the west/military forces.

CA units may include military forces carrying out activities that are normally the responsibility of the local or indigenous government. Selection of CA units must be based on a clear concept of the CA mission requirements for HA. Joint Pub 3-57[4] provides specific guidance. The CINC should consider the following when employing CA units—

- Most CA units and personnel need to be activated from the reserve establishment.
- If the JTF conducts civic action programs, CA units should be assigned as a primary staff element.
- CA units support the unified commander, other JFCs or subordinate components of the JTF, and the CMOC.

Psychological Operations Forces. Military PSYOP constitute a planned, systematic process of conveying messages to and influencing selected foreign groups. These messages are intended to promote particular themes that can result in desired foreign attitudes and behaviors. Such information may include safety, health, and public service messages, as well as messages designed to favorably influence foreign perceptions of US forces and operations.

PSYOP units are equipped with portable printing presses, loudspeakers, radio broadcasting stations, and other equipment that enables them to deliver messages in many diverse media. PSYOP personnel can provide a commander with real-time analysis of the perceptions and attitudes of the civilian population and the effectiveness of the information being disseminated.

PSYOP can play a significant role in HA operations. US and/or coalition forces may have to overcome hostile attitudes of the local populace. Forces involved in HA operations must avoid any hint of favoritism. The image to be projected is that of sympathetic competence; military forces are there to reduce the suffering of the indigenous people. The CJTF determines the requirements for a joint PSYOP task force to

> Both the UN and relief agencies were proponents of UNITAF conducting civic actions projects. USCINCCENT supported the field commander's position of limiting this activity to short-term projects that did not compromise the UNITAF primary mission. A specific issue that surfaced during the initial stages of force development was the requirement for a large CA contingent.
>
> USCENTCOM, in coordination with the interagency and UNITAF commander, determined that deployment of large numbers of CA personnel was unwarranted, given the limited scope of the operation. Future operations may involve mission tasks related to rehabilitation and reconstruction of civil administration. In such cases, a larger CA force may be appropriate for inclusion in the force list.
>
> Operation Restore Hope—A USCENTCOM Perspective

4. *Doctrine for Joint Civil Affairs,* November 1993.

support a JTF in the earliest stages of planning for the operation. PSYOP forces can begin to shape the perceptions of foreign audiences prior to the introduction of forces. Their early introduction into the theater can reduce hostile attitudes and increase the acceptance of US forces supporting the HA operation. Joint Pub 3-53[5] provides general guidance.

Army Special Forces Operational Detachments-A. Because only one active duty CA battalion exists for short-notice commitment worldwide, planners must have contingency options to have other forces fulfill critical functions based on the limited availability of these active duty and reserve personnel. SF ODAs are a possible alternative and can contribute to the HA effort in the following manner:

- By identifying HA needs (areas and specific requirements) during the conduct of reconnaissance or advance force operations.
- By being cross-trained to perform CA liaison functions.
- By serving as coalition support teams (CSTs) to provide liaison with coalition units.

Augmentation

It may be beneficial to augment the CJTF's staff with a group of experts from the regional CINC's staff. For example, the commander in chief of Pacific Command (CINCPAC) would deploy his staff to the forward area and work directly with the CJTF for the duration of the HA operation.

The deployable joint task force augmentation cell (DJTFAC) consists of designated experts in communications, coordination, logistics, planning, and PA. The DJTFAC is equipped with the necessary Worldwide Military Command and Control System (WWMCCS) computer terminals and communications equipment to enter movement data and transportation requirements into the system or data base. The DJTFAC is tailored to complement the normal staff of the CJTF.

Another augmentation example is the HAST employed by USCENTCOM. The HAST is made up of representatives from various sections of the CENTCOM staff. This advance team is normally temporal and may be subsumed into the JTF. Augmentation by the HAST can provide critical continuity between the advanced party and the main task force.

OTHER KEY ORGANIZATIONS

Coordination of the military and civil aspects of HA operations is imperative. Interagency cooperation, planning, and connectivity are essential for success of the operation. Interagency frameworks introduced at the operational level better enable the key organizations to orchestrate the total HA effort within the theater. An array of civilian agencies coordinates with military forces conducting HA. Some of these agencies represent concerns of their respective governments, while others represent high-profile international organizations. Essential interactions take place at the operational level. Key organizations may include—

- US Government agencies (USAID/OFDA).
- NGOs, PVOs, and IOs.
- Country team.
- Unified commander (CINC).
- Joint task force.
- UN agencies and multinational forces.
- NGOs, PVOs, and IOs.
- Host nation.

AGENCY FOR INTERNATIONAL DEVELOPMENT, OFFICE OF FOREIGN DISASTER ASSISTANCE

USAID/OFDA administers the President's authority to coordinate the provision of assistance in response to disasters, as declared by the ambassador within the country or higher

[5] *Doctrine for Joint Psychological Operations*, 30 July 1993.

DOS authority. USAID/OFDA has the authority to provide assistance, notwithstanding any other provision of law. This authority allows USAID/OFDA to expedite interventions at the operational and tactical levels through the use of NGOs and PVOs and other sources of relief. USAID/OFDA is responsible for—

- Organizing and coordinating the total US Government disaster relief response.
- Responding to mission requests for disaster assistance.
- Initiating the necessary procurement of supplies, services, and transportation.
- Coordinating assistance efforts with operational-level NGOs and PVOs.

The authority to provide foreign disaster relief comes from the *Foreign Assistance Act of 1961,* as amended, which provides for assistance to—

- Preserve life and minimize suffering by providing sufficient warning of natural events that cause disasters.
- Preserve life and minimize suffering by responding to natural and man-made disasters.
- Foster self-sufficiency among disaster-prone nations by helping them achieve some measure of preparedness.
- Alleviate suffering by providing rapid, appropriate responses to requests for aid.
- Enhance recovery through rehabilitation programs.

USAID/OFDA can coordinate directly with DOD for matters concerning defense equipment and personnel provided to the affected nation and for arranging DOD transportation. DOD Directive 5100.46[6] establishes the relationship between DOD and USAID/OFDA. The Deputy Assistant Secretary of Defense for Humanitarian and Refugee Affairs (DASD HRA) is the primary point of contact. When USAID/OFDA requests specific services from DOD (typically airlift), USAID/OFDA pays for those services/commodities. The CINC should have a coordination linkage with OFDA to correlate military and civilian assistance efforts. USAID/OFDA provides an excellent means for military and civilian operational-level coordination. For details on OFDA and coordination with DOD, see Appendix F.

USAID/OFDA has the capability to deploy a DART into the AOR to manage the US Government humanitarian relief effort. For details on the OFDA DART, see Appendix G. Once committed to an operation, USAID/OFDA should establish liaison with an HAST assembled by the appropriate CINC.

USAID/OFDA has operational links and grant relationships with many NGOs and PVOs that have relief programs outside the US. Other frequent USAID/OFDA collaborators include ICRC, International Federation of Red Cross and Red Crescent Societies (IFRC), UNDHA, United Nations Childrens' Fund (UNICEF), and United Nations World Food Program (UNWFP). OFDA also coordinates with other governments responding to disasters through donor country coordination meetings to solve operational or political problems. Figure 3-3 depicts operational-level connectivity.

US CHIEF OF MISSION (AMBASSADOR)

As the President's representative, the senior US diplomat in country is responsible for the overall coordination of US foreign HA. OFDA assists the embassy and USAID in coordinating and conducting operational assessments. These assessments vary in their results from provision of funding to the provision of supplies and services and/or the deployment of an OFDA DART. Also, depending on the nature of the situation, OFDA may request logistics support from DOD. If the SECDEF, through the CJCS, supports the OFDA request, a CINC can provide military assistance.

CIVILIAN ORGANIZATIONS

Relationships with nonmilitary agencies should be based on an appreciation of missions, lines of communication, and standardization of

[6] *Foreign Disaster Relief,* 4 December 1992

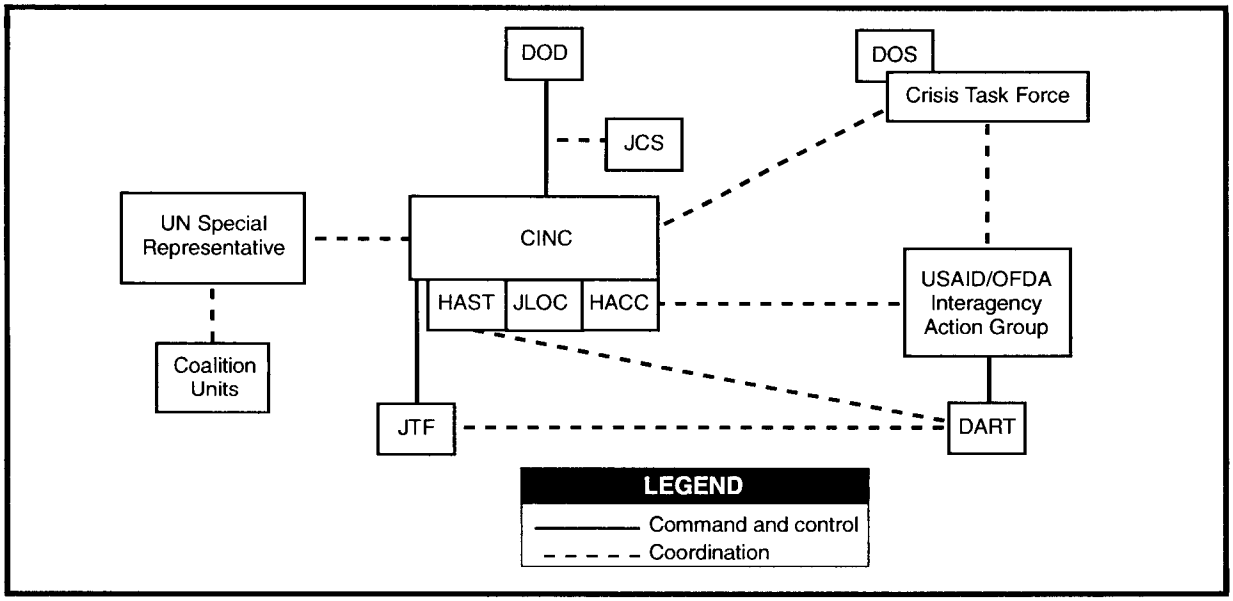

Figure 3-3. Operational-Level Connectivity

support. Not all NGOs, PVOs, and IOs appreciate military involvement in HA operations. Because of fundamental mandates or human rights beliefs, some NGO, PVO, and IO charters do not allow them to collaborate with armed forces.

Cooperation among military and civilian activities is imperative for a successful operation. When joint operations occur, military and civilian leaders must outline clear roles and responsibilities. Cooperation can be gained and maintained if agencies understand one anothers' missions. Commanders may find it beneficial to employ third parties for liaison and coordination with those NGOs and PVOs that are reluctant to establish direct contact. OFDA representatives have proven invaluable in providing coordination and linkages among NGOs, PVOs, IOs, and the military at the operational level.

AREAS FOR COOPERATION OF EFFORT

Planners may obtain information concerning relationships with government agencies, NGOs, and PVOs through lessons learned documents published by joint and individual service agencies. Logistics data bases, legal requirements, communications, existing support agreements, and desired end-state conditions provide basic areas for cooperation to ensure unity of effort in HA operations.

LOGISTICS DATA BASES

Military forces and NGOs and PVOs may gain some benefits from sharing automated data bases while executing the HA mission. Three tracking systems used in HA include the Disaster Assistance Logistics Information System (DALIS), the Commodity Tracking System (CTS), and a Pan American Health Organization (PAHO) computer tracking system designated SUMA. One method of accessing these data bases is through the OFDA DART.

Disaster Assistance Logistics Information System

DALIS was developed during Operation Provide Comfort by a joint team comprised of US Army Reserve (USAR) personnel, who worked closely with the UN High Commissioner for Refugees (UNHCR) and OFDA DART in conceptualizing and developing an easy-to-use, automated logistics management information

system. Subsequently, the USAR team, at OFDA's request and funding assistance, upgraded the software program.

DALIS is a comprehensive crisis-management tool that can be used to plan, track, identify, and locate resources; identify requirements; reduce redundancies; facilitate coordination; and produce reports. It tracks all aspects of UNHCR, governmental, and NGO and PVO logistics—including commodities—by source, type, quantity and cost; human resources; donor; location; status; required-by and due dates; and destination. It also automatically converts measurements to the metric system and costs into US dollars. Many of the DALIS capabilities have been incorporated into the systems of disaster-relief organizations in western nations. However, DOD has not completed its review of this prototype system for fielding.

Commodity Tracking System

OFDA developed CTS for UNHCR as a total commodity tracking, warehouse management, logistics data base designed to support the relief effort in the conflict in the Former Republic of Yugoslavia. CTS is written in FoxPro and uses DALIS for its initial design. CTS has networking capabilities, which DALIS lacks.

SUMA System

PAHO designed SUMA—an initial commodity-sorting and inventory system—to sort the initial distribution of sorted and unsorted in-kind donations. PAHO has taken a different approach to distribution of an emergency relief system. PAHO trains and supports local government ministries and local PVOs on the use of the SUMA system.

Legal Requirements

A mutual understanding of governing regulations and other legal requirements applicable to military forces and NGOs and PVOs is essential to promoting harmonious relations and preventing undesirable incidents. For more discussion on legal issues, see Appendix B.

Support Requirements and Agreements

Clarifying support requirements will reduce misconceptions between the military and outside agencies. The JTF is usually tasked to support other agencies. Standardized support agreements and memorandums of understanding should address funding considerations. The JTF may need to establish a cost center for each supported agency. Appropriate authorities should negotiate support agreements through proper channels. Agreements may include air and surface transportation, petroleum products and fuel, telecommunications, labor, security, facilities, contracting, engineer support, supplies, services, and medical support.

Public Affairs Operations

The global visibility of HA operations, the presence of large numbers of civilian media representatives, and the intense interest of the media in covering HA operations requires careful coordination among military PA elements. The JIB, Combined Information Bureau (CIB), or Allied Press Information Center (APIC) coordinate information policies and procedures to ensure a synchronized PA effort, to prevent misunderstandings, and to facilitate HA operations.

Donation Assistance

A donation assistance program addresses the receipt and distribution of donations such as gifts and foodstuffs made by US civilians and organizations in response to the humanitarian effort for the country receiving HA. Donation programs are best coordinated at office of the secretary of defense (OSD) level through the unified command, which provides guidance to the JTF.

At the JTF level, any donation program should stress that donations be sent to NGOs and PVOs that are better suited to determining the priority of providing donations to the affected area. The executive agent for the JTF donation program has typically been the command chaplain. Donations should only be accepted against identified needs, with an identified receiver, and with plans for the storage, transport, and distribution of the donated goods provided.

Chapter 4

TACTICAL-LEVEL ORGANIZATION AND COORDINATION

This chapter addresses key factors in planning and executing an HA mission—from forming the JTF through terminating it. Phases of the operation include predeployment planning, deployment, employment, redeployment, and transition and/or termination. This chapter identifies unique or critical considerations for HA operations that differ from standard military operations. Lessons learned from recent operations provide the basis for this chapter. Appendix A provides a list of past humanitarian assistance JTFs.

JOINT TASK FORCE TAILORING

In addition to the JTF headquarters discussed in the previous chapter, special staff elements and functional commands mold the force to the particular nature of each HA mission. The JTF is tailored during the unified command's predeployment planning phase; therefore, all of these organizations are not required for a given situation.

The nature of HA may require a JTF to be tailored so that combat support (CS) and CSS forces (CA, engineer, medical, logistics) may have an equal or greater role than other assigned units. JTF organization and composition specific to HA are addressed in terms of special staff sections, consolidated functions, and areas of operations. Figure 4-1 presents a model of notional JTF organization for HA.

Coordinating and managing special functions in a unified manner may be of benefit to the JTF and the mission. Through proper integration of support methods, the

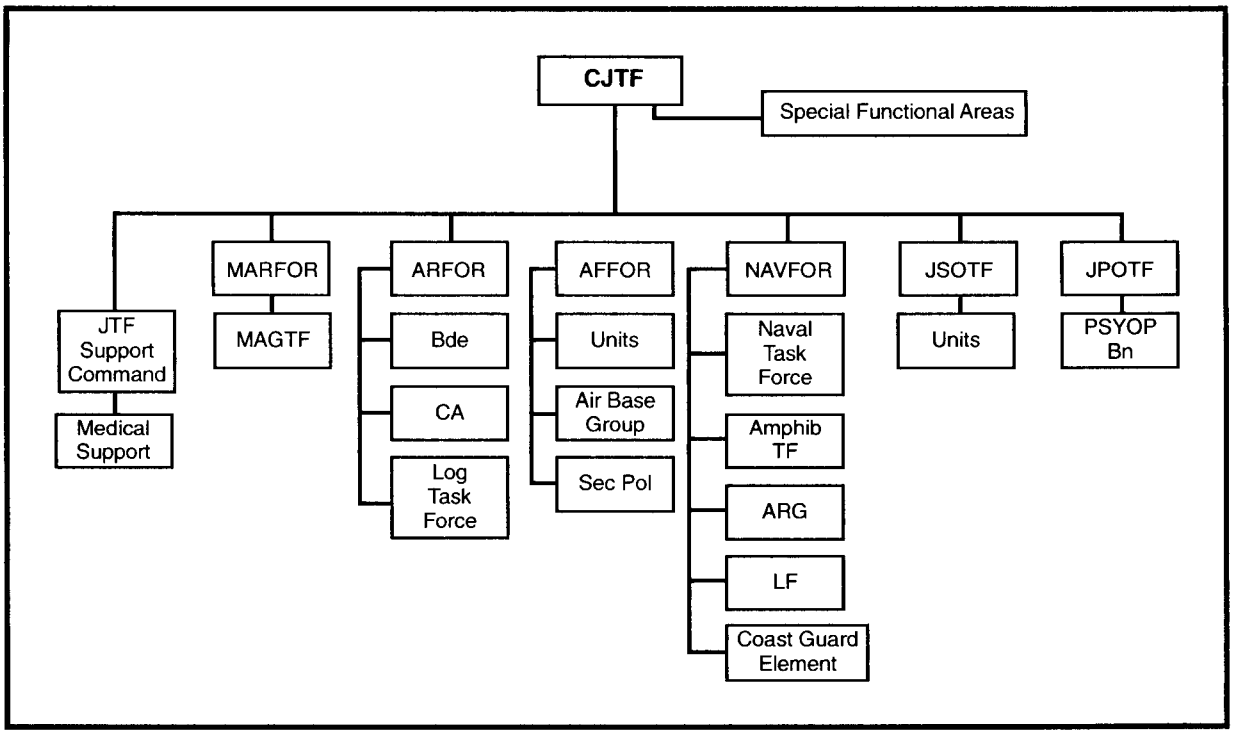

Figure 4-1. Notional HA JTF Organization

JTF can eliminate duplication of effort and conserve scarce resources. Examples of unified functions may include—

- A joint task force support command (JTFSC).
- A joint facilities utilization board (JFUB).
- A joint movement center (JMC).
- A coalition forces support team (CFST).

JOINT TASK FORCE SUPPORT COMMAND

During Operation Restore Hope (Somalia 1992-1993), the JTF organized a JTFSC. The JTFSC was a functional component command of the JTF. The mission of the JTFSC was to "provide logistics and medical support for US forces and as directed/required coalition forces deployed in support of Operation Restore Hope. . . provide common item support, interservice support, inland distribution of POL and dry cargo, and common used port operations as directed by the commander of the joint task force (CJTF)."

As a separate JTF component and coequal to other JTF service components, the JTFSC serves as an *honest broker* for setting theater logistics priorities and allowing certain efficiencies and economies of scale to be achieved in logistics operations. Additionally, the Army CSS units in the JTFSC contribute to the theater's line haul and water production requirements.

JOINT FACILITIES UTILIZATION BOARD

The J4 forms the JFUB. In a situation where a large number of coalition forces exist or US military forces operate within the same geographic area, allocation of facilities to accommodate all parties is necessary. The JFUB acts as the executive agent to deconflict real estate issues arising from multiple-user demands on limited facilities and recommends courses of action on unresolved issues. The JFUB can address coalition force accommodations, ammunition storage points, joint visitors bureau, postal facilities, transit facilities, and so forth.

JOINT MOVEMENT CENTER

The combatant commander establishes the JMC to provide support to HA operations. The JMC coordinates strategic movements with

USTRANSCOM. In addition, it oversees the execution of transportation priorities. The JMC is responsible for planning movement operations and for monitoring the overall performance of the transportation system. It expedites action and coordination for immediate movements requirements to ensure effective and efficient use of transportation resources. The JMC is normally under the staff supervision of the senior logistics staff officer.

COALITION FORCES SUPPORT TEAM

In a multinational HA operation, a CFST coordinates actions with coalition units. Duties of the CFST may include—

- Welcoming and orienting arriving forces.
- Providing initial staging sites, water, rations, and other support.
- Assessing the capabilities of coalition forces and their potential for prospective JTF missions and employment.
- Determining political sensitivities (historic hostilities or assistance) between coalition countries and the area of HA operations.
- Receiving, processing, and providing intelligence to arriving coalition forces.
- Briefing ROE to arriving coalition forces.
- Conducting ongoing assessments of coalition capabilities and recommending appropriate missions.
- Briefing C^2 relationships and relationships with NGOs, PVOs, and UN agencies.

PREDEPLOYMENT

The supported CINC commences formal planning on receipt of the CJCS warning order. Initial planning might begin earlier, based on intelligence reports that alert the CINC of a possible HA support mission. Normally, the CINC's J2 or J3 has the lead on interpreting warning signals (such as starvation patterns, seismic or volcanic activity, civil war, or weather trends). Contingency plans for the affected area may already exist to support a HA-type operation.

The CINC determines whether the HA operation is a supporting operation or the main operation. The CINC's intent and the desired end state form the foundation for the mission. In many situations, the CINC will have plans or predesignated JTFs to conduct an HA-type mission. However, the CINC might use a standing JTF, a predesignated contingency JTF, or a newly designated JTF task-organized for the specific HA mission. The CINC organizes the JTF according to joint doctrine and established standing operating procedures (SOPs). Joint Pub 5-00.2[1] provides specific guidance for the JTF.

During planning, the JTF organization and staff must be tailored to meet the requirements of the HA mission. Planners determine whether military units will operate under neutral humanitarian aid authorities and, where possible, from neutral bases. Clarity of command, control, and communications (C^3) relationships among the JTF, DOS, USAID/OFDA, the UN, ICRC, the host nation, and NGOs and PVOs reduces organizational conflicts and duplicative relief efforts.

The eventual transition of HA operations must be an integral part of predeployment planning. *Transition activities must begin as soon as the JTF arrives in theater.* To ensure that everyone understands and agrees to the transition plan, it should be part of the operations order (OPORD). Transition is discussed in detail later in this chapter.

Readiness—often the success of humanitarian missions to reduce suffering and save lives—hinges on the timeliness of responding units. Predeployment plans should account for streamlined deployment procedures that may be critical in disaster scenarios where time is crucial. Plans should also provide for rapid deployment joint readiness exercises so

1. *Joint Task Force Planning Guidance and Procedures*, September 1991.

that coordination and interagency relationships can be tested and refined.

As discussed in Chapter 1, HA operations might involve coalition forces. In such a case, the JTF might form the core of a larger CTF.[2] JTF planners should consider coalition operations. The new draft Joint Pub 3-16[3] provides additional considerations. A key question of the JTF is what role the military force will provide to the relief effort. Will the JTF provide the actual relief (food, logistics, medicine, transport relief supplies) and provide security for the UN, ICRC, and NGOs and PVOs?

Upon being assigned a mission, the CINC organizes the appropriate JTF or a single component command to accomplish the mission. As in all military operations, a JTF requires a clear mission statement.The CJTF may have to develop and submit his own mission criteria up the chain of command. For example, the mission statement for Operation Provide Comfort (Northern Iraq) included:

- Provide medical care.
- Provide clothing and shelter.
- Move into the refugee camps.
- Provide assistance for the aerial supply effort.
- Organize the refugee camps.
- Build a distribution system.
- Provide transportation and/or supervise the distribution of food and water.
- Improve sanitation.
- Provide site and convoy security.

Planners dictate the JTF's composition, which depends on the mission, initial estimates of the situation, and guidance from higher headquarters. As in all operations, major mission areas, such as force security, sustainment, and HA requirements, compete for limited time and assets. Planners should consider the possible need to augment HA JTFs with expertise not typically resident in most commands.

2. Throughout this chapter, JTF and CTF are used synonymously.
3. *Joint Doctrine for Multinational Operations.*

The CJTF should realize that the JTF will encounter NGOs, PVOs, and IOs in the operation. Often, these organizations are in the area before the force arrives, remain while the force accomplishes its mission, and stay in place once the force departs. These organizations are staffed with competent and knowledgeable people who are fully cognizant of the political and cultural traditions of the area. Coordination and cooperation with these organizations can be paramount to the success of the HA operation.

COMMANDER'S CAMPAIGN PLAN

During planning, the JTF develops a subordinate campaign plan in order to outline the commander's intent. The phases of the plan for Operation Restore Hope are shown in Figure 4-2.

AREA ASSESSMENTS

Area estimates or studies are key elements during planning. Current or complete area assessments or studies may or may not exist for the country or area in which the mission takes place. The CA direct support team is capable of updating area assessments. These studies should provide political, cultural, economic, military, geographic, PA, weather, and other information on the area.

HA mission assessments should focus on the factors that led to the HA mission and current situation. These assessments should identify the causes of the HA crisis and not just the symptoms. Tasking may involve the causes or may only address relief of the symptoms of the crisis. The military force must understand that its support to the HA mission may not solve the underlying causes requiring the HA.

Studies also assist planners in identifying information gaps for further intelligence-gathering such as on—

- Infrastructure.
- Host nation capability.
- Food capacity.
- Security risks.
- Support assets.
- Storage facilities and requirements.

- Roads, air, and port capabilities.
- Numbers of NGOs, PVOs, and IOs on the ground.

Assessments can answer some of these questions. IPB is tailored and expanded in scope to deal with the ambiguities of HA operations and is critical for planning, force design, and time-phased force deployment data (TPFDD) development. Additionally, USAID/OFDA and NGOs, PVOs, and IOs in the area have experience and knowledge that can supplement traditional information sources.

LOGISTICS

HA missions require integrated logistics assessments. Assessments should include host nation and theater support capabilities. Remote and austere sites place a high priority on early deployment of materials handling equipment and pre-positioned stocks. Detailed logistics planning should include—

- Identification of time-phased materiel requirements, facilities, and other resources necessary to support the current operation.
- Determination of logistics planning factors to be used for this operation and development of logistics requirements. Additionally, the method to determine sources for all classes of supply must be defined.
- Identification of support methods and procedures required to meet the air, land, and sea lines of communication.
- Provisions for coordinating and controlling movements in the HA area of operations to adjust the materiel flow commensurate with the throughput capability.
- A description of the interrelationship between theater and strategic LOCs, to include the need for airfields capable of supporting strategic and theater airlift aircraft.
- Development of a country or theater concept of support.
- Development of a plan to provide food, equipment, and medical supplies to relieve the suffering in the absence of NGOs, PVOs, and IOs.

The J4 should consider contracting for support capabilities to augment critical supplies, services, and real estate concerns. Contracting support can come from within the host nation or from outside the country. If support is contracted from inside the country, the country logistical resources should be able to support the country first and then the military requirements. Contracted supplies, transportation, labor, and services can aid the

Phase I. Secure Lodgment and Establish Joint Task Force. Establish lodgment, gain control of the humanitarian relief supplies, and introduce follow-on forces.

Phase II. Expand Security Operations Out to Relief Distribution Sites. JTF expands lodgment by securing several inland bases to facilitate relief supply distribution.

Phase III. Expand Security Operations. Expand inland bases and security operations. Expand security of the humanitarian relief sectors (HRSs) deterring criminal activity and provide security for NGOs and PVOs.

Phase IV. Transition to UN Peacekeeping Forces and Redeploy. Active transition phase of standing down the JTF headquarters and forces. Phase IV ends when the JTF is relieved of responsibilities for military operations.

Figure 4-2. Campaign Plan for Operation Restore Hope

host nation's economy and facilitate the transfer of responsibilities back to the nation or NGOs and PVOs. Contracting customs vary by country or region, and contracted services and goods from one country may not be acceptable in the host country for a variety of legitimate reasons.

Logistics support to coalition countries can become a critical issue. Such support burdens US logistics forces but may help bring about the participation of other countries in the HA effort and hasten the departure of US forces. The JTF must establish movement priorities among JTF support requirements, US Government-furnished HA materiel, coalition or UN requirements, and possible NGO and PVO HA materiel. The JTF must work with coalition or UN forces and NGOs and PVOs to ensure their movement requirements are known. The primary means for originating and validating movement requests is the Joint Operations Planning and Execution System (JOPES). The effective movement of materiel requires close coordination among the JTF service components, UN or coalition forces, NGOs and PVOs, the regional CINC, and USTRANSCOM.

Some JTF commanders have successfully developed a *multinational logistics command* to coordinate the vast array of logistical responsibilities that support a coalition mission. This useful and viable option can be considered but should be focused toward certain common-use consumables such as fuel or rations. Other areas, such as medical and health service support, may require a more narrow national perspective when planning—for example, the provision of blood supply. For UN operations, the JTF commander should obtain specific guidance regarding procedures to be followed for seeking possible reimbursement for supplies and equipment associated with the operation.

RULES OF ENGAGEMENT

The supported CINC establishes ROE, which are critical for force protection, for HA operations. Based on the CINC's guidance and the evolving situation on scene, the CJTF should be prepared to request changes to the ROE and forward them up the chain of command for approval.

All units in the theater must disseminate, understand, and rehearse ROE. Coalition forces must understand the ROE and reduce any discrepancies between the ROE and instructions from their military headquarters. Not all countries have the same ROE or interpret them the same. The CJTF should communicate ROE to other participants, such as NGOs and PVOs, as much as possible without compromising security.

Once the JTF finalizes the ROE, unit commanders must train the force to reinforce the rules. In a perfect situation, training would commence before deployment. Since HA operations may be time-sensitive, training in ROE is continuous. It may be beneficial to condense ROE into ROE cards and rehearse likely situations through HA exercises. Appendix B provides sample ROE for HA operations.

CODE OF BEHAVIOR

The international community has developed a proposed *Code of Behavior for Military and Civil Defense Personnel in International Humanitarian Aid;* however, this code is **not** approved. The JTF commander should know that—

- The code exists.
- The code has not been endorsed by any international organization and is not binding.
- Some countries with forces and personnel involved in HA may use the code as a guide to behavior.
- A copy of the code and other military and civil defense assets (MCDA) documents may be available through the UN or some other international organization involved in a large-scale HA operation.
- If available, appropriate JTF staff personnel should review the code.

MEASURES OF EFFECTIVENESS

During HA operations commanders face the difficult challenge of determining whether or not the force is meeting mission objectives.

Commanders need to understand the progress of the mission to make informed decisions about resource allocations and develop or modify military operations. The JTF may develop various MOEs, whether quantitative or qualitative. No single, all-encompassing MOE checklist exists for HA operations. MOEs change with different missions. MOEs cannot cover every aspect of a mission; therefore, commanders should resist heavy reliance on them. A discussion of MOEs for domestic responses is presented in Chapter 5.

Commanders need some means to evaluate operations. Based on past experience, staffs should keep several factors in mind while developing and using MOEs in HA operations. Commanders should ensure that MOEs are *appropriate, mission-related, measurable, reasonable in number, sensitive,* and *useful.*

Appropriate

The MOEs should be appropriate to the objective of the MOE effort. If the objective is to present information to those outside the command, MOEs should be broad and few in number; if the objective is to assist on-scene commanders in making decisions, MOEs should be more specific and detailed.

Mission-Related

MOEs should relate to the mission. If the mission is security, for example, MOEs should help commanders judge improvements in or problems in improving security. If the mission is relief, MOEs should help commanders judge improvements in living standards. If the mission expands, so should the MOEs.

Measurable

MOEs should vary with changes in the command's performance in relation to the mission and opponents. Quantitative MOEs are likely to be measured more consistently than nonquantitative ones and thus, when appropriate, are preferable. When using nonquantitative MOEs, the command should establish clear criteria for their measurement and disseminate the criteria to prevent accidental mismeasurement or misinterpretation of the results.

Reasonable in Number

The number of MOEs should be neither so few that they are insufficient to fully portray the situation nor so numerous that they become unmanageable or not worth the effort expended.

Sensitive

MOEs should change when the performance of the command or actions of opponents change; extraneous factors should not greatly influence them.

Useful

MOEs should respond to changes in the situation soon enough for a command to detect and act on them. Commanders should meet,

Security and Level of Violence

- Percentage of relief supplies (in tons) reaching distribution centers
- Distribution centers to distribution points
- Distribution points to feeding centers
- **Source:** NGOs, PVOs, HAST, OFDA DART
- Number of violent acts against JTF forces
- Individual Acts
- Organized Acts
- **Source:** JTF (J2)
- Number of violent acts against NGOs and PVOs
- Individual Acts.
- Organized Acts.
- **Source:** NGOs and PVOs
- Checkpoints and roadblocks manned by factions or bandits
- Number and location
- Number of overt acts where tolls are extorted
- **Source:** NGOs, PVOs, JTF (J2)
- Decreasing NGO convoy security requirements
- Number of security guards used
- **Source:** NGOs and PVOs

but not be limited to, the above criteria. Accurate and measurable MOEs can contribute to mission effectiveness in many ways. MOEs can help the CJTF answer the following questions:

Infrastructure

Airfield capacity:

- Number of airfields evaluated as transport aircraft-capable
- Day-night capability

Source: Joint special operations task force (JSOTF), JTF (J3)

Water sources: number of gallons of potable water per day.

Source: JTF (J4), NGOs, and PVOs

Main supply routes (MSRs): Percent trafficability for key MSR lines of communication to relief sites

Source: JTF (J4), NGOs, and PVOs

Medical and Public Health

Crude mortality rates

Under-five mortality rates

Cause-specific mortality rates

- Malnutrition
- Diarrhea
- Acute respiratory infections
- Other diseases

Severe malnutrition measurements (less than 70 percent of height and weight measurements).

Source: NGOs and PVOs

Agriculture

Market price of foods

Market price of animals

Household surveys (for example, how much food is available in the home?)

Food production (cultivation) and animal herds

Source: NGOs and PVOs, JTF

- What tactics and/or strategies are or are not working?
- Should the CJTF shift the mission emphasis or shift resource allocations?
- Can the operation shift from one mission phase to another?
- When is the mission complete?

Involvement of IOs, NGOs, and PVOs is critical in the development of MOEs. Such involvement encourages communication among the major participants, assists in data collection, clarifies mission priorities, and expedites transition and redeployment of military forces. To develop appropriate MOEs, the JTF should coordinate with military commanders and decision makers representing IO, NGO, and PVO activities. As they are identified, MOEs can then be organized into four main categories.

- Security and level of violence.
- Infrastructure.
- Medical and public health.
- Agriculture.

For each category, a graphic identifies specific measures and potential information sources. The JTF assigns the section that coordinates these inputs and measures trends over time. Because these trends affect future plans, the J5 should coordinate this analysis. The frequency with which this data is collected and measured may vary by campaign phase.

OTHER CONSIDERATIONS

Provisions should be made for CJTF input to the Worldwide Military Command and Control System Intercomputer Network (WIN) and the JOPES data base. The HA mission requires constant monitoring and updating to ensure timely decisions and allocation of assets to meet the emergency. See Joint Pubs 5-00.2[4] and 5-03.1.[5] During predeployment planning, countless questions require answers.

4. *Joint Task Force Planning Guidance and Procedures*, Appendix A, September 1991.
5. *Joint Operation Planning and Execution System*, Volume I, 4 August 1993.

Predeployment Planning Considerations

- What is the mission?
- What is the status of hostile military/paramilitary forces in the area?
- Who are the key civilian leaders, community elders, and their supporters?
- What is the status of existing public services, such as water, electricity, communications, sewage collection, transportation systems and assets, and relief agencies already in place?
- What is the status of doctors, firemen, and police and their availability and levels of expertise?
- What is the medical and nutritional condition of civilian personnel and the physical locations of medical facilities?
- What are the unique shelter/food needs and host nation support availability (construction assets, food storage, materials handling equipment, and transportation capacity)?
- What is the status of sanitation conditions within the AO?
- What operational facilities and host nation resources are available to support HA forces?
- What unique social, ethnic, or religious concerns affect the conduct of the operation?
- What relief organizations are present and what functions are they performing?
- What is the international community's goal and plan for addressing the humanitarian crisis?
- What is the communications security plan regarding communicating with NGOs, PVOs, UN agencies, and coalition forces? Do these agencies or forces require equipment augmentation?
- What are the information-gathering and dissemination requirements? What information can be obtained from host nation, UN/coalition forces, and NGOs and PVOs?
- What is the legal authority for the mission? What agreements or mandates apply to this operation? Are SJA personnel and assets planned for?
- Have the appropriate ROE been prepared and published prior to deployment?
- Has the Armed Forces Medical Intelligence Center (AFMIC) been alerted and a request for a medical intelligence report on the area identified?
- What is the priority of HA capability for the mission: medical, logistics, command and control, force security, and so forth?
- What, if any, coordination systems are in place among PVOs, NGOs, and IOs in the host nation?
- What coordination is required with the CINC, supporting CINCs, subordinate JTF commands, NGOs and PVOs based in the US, UN organizations, and DOS?
- What are the liaison requirements?
- Are interpreters available from the JTF, CINC, US agencies?
- What are weather and terrain limiting factors?
- What is the media presence and the public interest (global visibility) of the HA mission and situation?
- What is the health service support (HSS) mission? Is it clearly stated in the operational commander's mission statement?
- What medical intelligence is available for the AO? AFMIC provides information on factors that affect human performance capability and well-being such as infectious diseases, sanitation, venomous insects and animals, toxic plants, the environment, and military and civilian health care capabilities.
- What is the mission's target patient population? Military only or are civilians also treated?
- What is the local standard of care? Can it be continued after forces redeploy?
- How do HSS systems receive logistics support? HSS logistics planning is an essential element of the overall planning process for a successful health care delivery system and should include supplies, equipment, medical equipment maintenance and repair, optical fabrication, blood management, transportation, and contracting.
- Who provides medical laboratory support during assessments and the initial phases of the operation?

> The employment of the joint forward laboratory (JFL) in Somalia during Operation Restore Hope was invaluable to the JTF surgeons in directing preventive medicine efforts, and the laboratory's contributions were directly credited with helping minimize morbidity due to infectious diseases among US personnel.
>
> Operation Restore Hope Lessons Learned

DEPLOYMENT

Deployment of the JTF is based on the severity of the situation, political considerations, and mobility assets. Requirements and decisions made during planning affect deployment. The JTF should be structured to deploy in force packages. Rapid response, austere conditions, and lack of infrastructure often place unique demands on the JTF. Initial phases of deployment require only the critical command, control, communications, security, and logistics capabilities. Follow-on forces deploy as capabilities expand to support the forces and conduct the HA mission.

PLANNING

Deployment planning and execution considerations for HA missions are fundamentally the same as in any military operation. Close coordination between the staff sections of the JTF is critical.

COORDINATION

Coordination during the deployment phase is based on guidance developed during the planning phase and conditions as they change regarding the situation. The CJTF must continue to keep the lines of communication open with higher headquarters (CINC); service components of the CINC; subordinate and supporting commands; NGOs, PVOs, and IOs; the UN; and OFDA DART.

USTRANSCOM consists of the Military Traffic Management Command of the Air Mobility Command and the Military Sealift Command. These components provide movement schedules for requirements in the sequence requested by the CJTF. The JTF needs to update subordinate commands on changes to the deployment schedule or changes in the mission. Changes in the mission, such as HA to peace enforcement, may require a shift in force deployment. NGOs, PVOs, IOs, and UN agencies may require JTF support during

Deployment Planning Considerations

- Are command and control assets more crucial than immediate provisions of HA supplies?
- Are the requirements of the JTF components being met?
- Are these requirements complementary or contradictory to the mission?
- Do the units being airlifted match up with the equipment (for example, is the JTF sending engineers to the area when their heavy equipment and construction material are not scheduled to arrive by ship for another two weeks)?
- What are the NGO and PVO requirements for transportation, and has the military committed to transporting their supplies (funding and authority)?
- Have preventive medicine units been scheduled for early deployment?
- Will media coverage of the initial deployment focus on the JTF's first actions that alleviate the conditions requiring HA?
- Will conflicting interests for mobility assets strain the JTF's deployment?
- Will command and control assets, food and medical supplies, security forces, equipment assets, and foreign government restrictions affect the deployment?
- How do planners ensure the CJTF's guidance and focus of effort is followed?
- How will accurate and timely submission of information into WWMCCS and JOPES be maintained to schedule movements and keep higher and lower commands abreast of the deployment schedule, particularly deployment coordination of coalition forces?
- How will the JTF account for personnel in order to report casualties, provide essential services such as mail, and determine the total numbers of personnel for the purpose of national/service reimbursement?

> Two disparate types of operations were being conducted simultaneously during Operation Provide Comfort. One was the humanitarian effort and the other the security operation. In many ways they competed and conflicted with one another. The staff ran these as concurrent operations and often had to set aside specific times to focus totally on one operation or the other. Because of conflicting priorities, movement of relief supplies and humanitarian forces competed with the movement of security equipment, ammunition, materiel, and forces. Security operations had to precede humanitarian operations to clear areas of mines and potential hostile forces. While most civilian relief agencies grew more comfortable working alongside military forces performing humanitarian tasks, they were not comfortable around gun-toting security forces.
>
> Operation Provide Comfort
> After-Action Report

deployment not already identified during predeployment planning.

LIAISON

Liaison teams or personnel (military and civilian) assigned up and down the chain of command ensure the JTF can identify concerns and issues. These teams are critical during the deployment phase. Liaison teams in the mission area are critical to keeping the JTF informed of changing conditions and events. They assist the JTF in determining how the HA operation is progressing and whether emphasis needs to shift to avoid further human suffering. The HAST (previously discussed in Chapter 3) can accomplish this critical liaison function if assigned to support or augment the JTF. Liaison procedures extracted from Joint Pub 5-00.2[2] are provided in Appendix H.

Liaison personnel should be exchanged among major contributors to the force. Their functions include the identification of political and legal constraints, transportation capabilities, logistics requirements, and other factors affecting the employment of coalition units.

EMPLOYMENT

CJTF responsibilities during employment include force and resource monitoring and management, planning for current and future operations, execution, and reporting. The employment of a JTF for HA missions has some unique considerations.

EXECUTION

HA is something most military forces have not normally trained to accomplish. Security concerns, global visibility, political considerations, acceptance, logistics, health factors, and unknown length of mission can affect the force and the mission. Integrating the coalition forces impacts on how the JTF assigns missions and organizes the area.

The mission of the JTF, although consistent in its overall direction to relieve the plight of the populace, may undergo major

Employment Considerations

- What is the JTF's actual role in the HA mission?
- Does the JTF provide support to the UN, ICRC, NGOs, PVOs, the actual HA?
- Does the JTF conduct HA and then transition functions to the UN, ICRC, NGOs, and PVOs?
- What is the relationship with an OFDA DART?
- Is the HA operation part of a larger mission?
- What are the force objectives?
- How will the objectives of the mission be evaluated to determine success (quantitative or nonquantitative)?
- What is the personal code of conduct for the HA operation?

evolutions in its specific taskings during the early stages of the operation. This can be a positive development in that each new estimate of the situation leads to a necessary refinement or modification of the mission and tasks. Continuing on-scene estimates of the situation and rapid adjustment of the mission and tasks are appropriate. This is sometimes referred to as *mission creep*.

Military coordination with the UN; NGOs, PVOs, and IOs; and OFDA DART and its on-scene representative is critical during the execution of the mission. In some cases, 50 or more NGOs and PVOs may be working in the AOR. These NGOs and PVOs may coordinate their efforts, but in some cases, they may operate independently of one another. Military concerns may not be compatible with the concerns of the NGOs and PVOs (security, mission priorities, support requirements, expectations).

Early in the operation, the JTF should establish a dialogue with OFDA DART, NGOs, PVOs, and IOs to ascertain capabilities and limitations and to facilitate future cooperation. This dialogue can be accomplished with a clear mission statement involving OFDA DART and NGOs and PVOs in mission planning—disseminating the view that OFDA DART and NGOs and PVOs are allies and partners.

Employment considerations and factors affecting the outcome of the HA mission depend on decisions made during planning and deployment. These factors include—

- Getting minimum equipment on the ground to provide the basic service required.
- Having sufficient equipment on hand for austere jump capabilities responsive to new missions and critical outages.
- Transitioning key staff positions depending on the emphasis of the phase of the operation (air-to-ground operations).
- Having each staff establish a continuity file.
- Providing interpreters for PSYOP and CA teams when dealing with large crowds.
- Preparing specialized briefing formats to deal with civil-military operations; briefings should emphasize the condition, activities, and especially the needs of the supported population; briefing UN, ICRC, NGOs and PVOs, and OFDA.
- Establishing preventive medicine strategies to take precedence over therapeutic medicine in the initial stages of an HA situation; emphasizing sanitation and vaccinations.
- Deploying PA elements early.
- Avoiding basing mission success on US or western standards; working toward building back the local infrastructure and health care system to the level in place before the disaster.
- Encouraging civilian groups to step forward and coordinate their valuable expertise and assistance.
- Coordinating use of transportation assets to ensure that urgent needs are met.
- Ensuring coordination is conducted between transportation elements and the military police who may provide security and traffic control.
- Developing plans for recovery operations of transportation assets, including contingency plans for replacement of vehicles.
- Avoiding black market activity by controlling distribution of food by ration cards; using local trucks and drivers for distribution (to stimulate the economy) and monitoring frequently.
- Determining requirements to repair MSRs.
- Determining legal and fiscal authority to conduct civic action projects.

One consideration for organizing the AO is to designate HRSs. Geographic boundaries for such sectors should include ethnic or tribal boundaries, political affiliation, relief agency AO, political acceptance of certain coalition countries, and contiguous sectors with forces assigned (components assigned multiple sectors are connected).

SECURITY

Security is the CJTF's responsibility. JTF planners must specifically address security for NGOs and PVOs in ROE, the mission statement, or both. Depending on the environment, security forces may be necessary. ROE should contain guidance regarding which people JTF forces may protect. Hostile crowds, starving people, armed resistors, or bandits require appropriate responses. It may be necessary to first establish the environment for HA operations to commence peace enforcement. This requirement can adversely affect the speed and effectiveness with which assistance is provided to the area. Security of the JTF is a primary concern. Some concerns include—

- Ports and airfields.
- NGO and PVO requests.
- US Government activities such as OFDA DART.
- Host nation agencies.
- HA recipients.
- HA supplies, convoys, and MSRs.
- HA distribution centers.

Convoy security for HA follows the same set of tactics for any military convoy operation. If the JTF is tasked to provide convoy security or security for the NGOs and PVOs, then it should plan such with input from all forces and agencies involved. The organization of the AO into component or HRS can cause problems for convoy operations. A movement control center (MCC) established to coordinate transportation coordinates all cross-boundary travel and security responsibilities for convoy operations.

In a hostile environment the JTF may have the added responsibility of weapons confiscation. JTF planners must develop specific plans and procedures and disseminate them to all forces. In addition, the ROE should address the use of force during weapons confiscation operations. Special consideration must be given to the security forces employed by the NGOs and PVOs.

INTELLIGENCE

HA operations require intelligence information because they are politically sensitive, conducted in the midst of civilian populations during times of crisis, and employ forces with substantial capabilities. The commander must continuously and clearly identify information requirements to provide the necessary resources to conduct intelligence operations.

Even more than with other types of military operations, successful HA operations are dependent upon timely and *actionable* intelligence. As in other MOOTW, intelligence in HA operations must deal with all aspects of the AO, to include personnel and organizations therein. In this environment, military intelligence requirements include such subjects as political, ethnic, religious, and economic factors. Some supporting intelligence publications are listed in the References section.

Host nation populations hold the key as to whether an HA mission succeeds. While US and/or friendly armed forces are tasked to support humanitarian goals, each and every thing has a potential political, economic, military, social, or religious impact on the population or segments of the population. The primary intelligence effort should be to assess the agenda of every faction and determine how it may affect friendly operations. Open sources are employed to determine patterns or methods of operation, factional-associated geography, and factional-associated agendas. The resulting analysis is employed to—

- Avoid obvious hostilities.
- Prepare for nonobvious hostilities (ambushes and deliberate attacks on the HA force).
- Employ appropriate force in order to accomplish the mission.

Human intelligence (people talking to or about people) is a significant portion of any HA intelligence support program. However, it must be accomplished properly. Formal contact with NGOs and PVOs should be directed through CMOC personnel. The result

of increased focus on intelligence is units and military personnel with a greater *situational awareness.* This enhances the ability of US forces to make informed judgments about which areas to avoid, where to take extra precautions, and so forth, based upon their specific mission and the overall HA mission.

COMMUNICATIONS

The ability to communicate with all of the military forces, NGO, PVOs, UN agencies, host nation agencies, and other organizations involved in the HA operation is imperative. See Figure 4-3. Communications with coalition forces, OFDA DART; NGOs, PVOs, and IOs; and other agencies should be established early in the operation.

Most likely, nonmilitary agencies will have communications networks established for their own uses. These networks may include commercially leased circuits (from the host nation communications agencies and companies), commercially leased satellite services (such as INMARSAT), and high-frequency (ham, long distance) and very high frequency (intravehicular convoy control type) radios. As robust military communications most likely will not be available, close cooperation between nonmilitary agencies and military forces will be required to maximize efficient use of available commercial and host nation communications networks. As military communications assets are phased in for the operation, NGOs, PVOs, and others can be expected to increasingly request access to those communications. Any supporting plans must initially allow for very limited military communications and emphasize reliance on commercial and host nation communications assets. In addition, these plans must closely address needs for secure communications and requirements to control cryptographic materials (secure telephones, keymat, and so forth) and releasability of cryptographic and/or classified information to others.

JTF planners must identify and plan frequency management for the operation. Regulations and orders for integrating coalition forces into the frequency management program have to be deconflicted with security requirements. The use of nonmilitary radios and communications equipment by OFDA DART, NGOs and PVOs, UN, and ICRC can create deconfliction problems. Planners must also consider host nation requirements and restrictions.

PUBLIC AFFAIRS CONSIDERATIONS

PA considerations are important for several reasons. First, the public and the

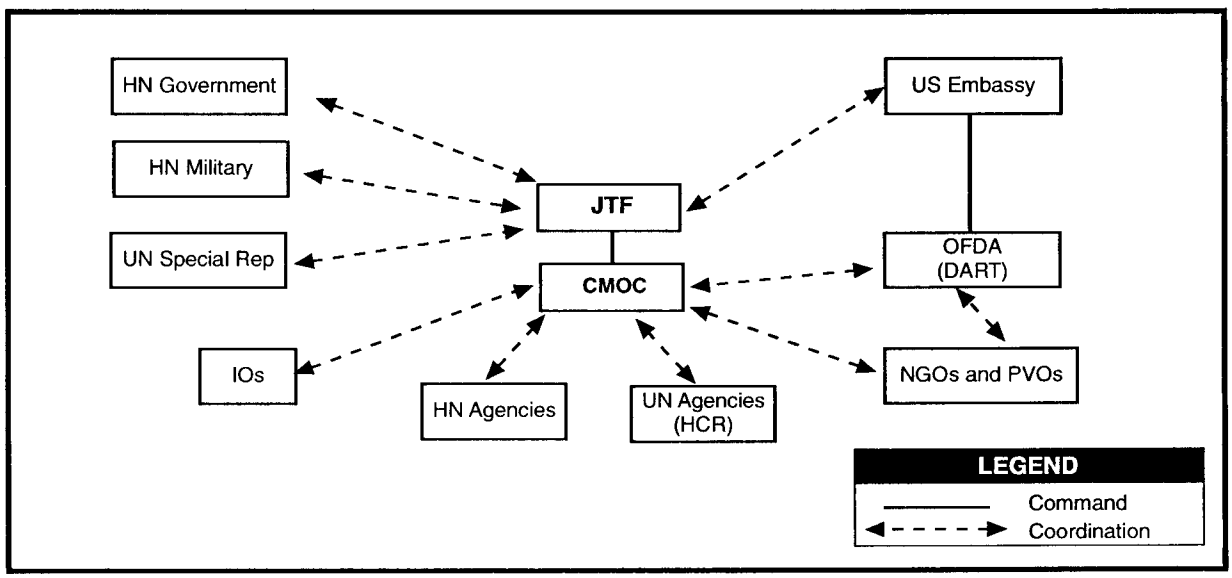

Figure 4-3. JTF Coordinations

media have an intense level of interest in JTF operations; second, the members of the JTF need PA services; third, commanders and soldiers of the JTF must be able to communicate their intentions and actions to interested audiences. These considerations can be met through planning for establishment of radio and television broadcast stations and a JIB in the theater.

MEDICAL CONSIDERATIONS

Medical considerations for the JTF in an HA environment are significant. The two areas to consider are medical care for the JTF and coalition forces and medical care for the local populace. In general, JTF medical assets support JTF personnel, while host nation facilities, NGOs and PVOs, UN, and ICRC health organizations support themselves and the civilian population. In most cases the AO is austere and environmentally hostile. This can cause the JTF to suffer many medical and sanitation problems. Good medical estimates and preventive medicine planned early in the operation can pay significant dividends. These include immunizations for all personnel, prevention of insect-borne diseases, and prevention of fly, water, and food-borne illnesses.

The JTF should use its preventive medicine assets. Intensive epidemiological monitoring, coupled with sophisticated diagnostic capabilities (serology, bacteriology, parasitology) can help prevent development of epidemics among deployed forces.

Title 10, US Code, prohibits use of military medical assets for treatment of civilians *except* when specially authorized by the appropriate authority. This can cause problems for the JTF regarding the perception that the US cannot and will not assist the area with medical care. The highly visible nature of US cantonment areas naturally leads civilians to seek medical treatment from these facilities. Because this issue is above CJTF level, he must plan early in the operation how to deal with civilian medical requests.

Medical planners should attempt to coordinate with NGO, PVO, UN, and ICRC medical facilities immediately upon commencing the operation. The JTF should create some type of central point or organization for coordinating medical requirements. However, the differing policies and positions of individual NGOs, PVOs, and IOs; military capabilities and policies; and host nation requirements can create friction. A medical coordination agency formed at the HOC or CMOC can provide a viable solution for medical requirements. Formation of this coordination agency by the JTF and early cooperation by the parties involved in the operation increases efficiency and reduces redundancy. The JTF must establish policies for treating civilians injured by JTF actions and provide air search and rescue and/or medical evacuation assets for civilians.

TECHNICAL ASSISTANCE

The military often provides technical assistance in the form of advice, assessments, manpower, and equipment to host nations or civilian agencies. NGOs, PVOs, and IOs may seek the advice of military personnel to conduct projects necessary to accomplish their mission. Early in the operation, the CJTF should determine policy regarding technical assistance to be provided to NGOs, PVOs, and IOs. Use of military equipment and supplies to conduct civil action-type missions may be limited or forbidden. Early in the operation, the CJTF should establish criteria to provide technical assistance to NGOs, PVOs, and IOs. The JTF may conduct projects to build or improve infrastructure needed to complete the military portion of the HA mission, once approved and funded.

NGOs and PVOs, UN, and ICRC normally distribute food and other supplies by using their own or contract transportation assets. Use of military assets to conduct the actual delivery of supplies is usually discouraged unless the situation is life threatening. Plans to overcome problems or obstacles should be solicited from NGOs, PVOs, IOs, indigenous personnel, and the military.

AIRSPACE COORDINATION

Coordination for air operations follow normal airspace coordination procedures for any joint or coalition operation. The additional

> A good example of technical assistance occurred during Operation Restore Hope during the flooding of the lower Shabelle River. Through the CMOC, a PVO proposed a solution to contain the Shabelle river. The CMOC referred the PVO to the JTF engineer officer for advice. Following consultation, the PVO requested technical assistance in the form of equipment and operators to assist in building dikes. The CMOC and OFDA dispatched a team to the flood region, conducted an assessment, and validated the requirement for JTF support. Based on a need identified by the PVO, technical assistance in the form of advice, assessment, equipment, and personnel was provided by the JTF.
>
> Operation Restore Hope
> CMOC Operations Officer

burden on coordination involves the HA cargo flights conducted by NGOs, PVOs, and IOs. During a large relief operation, increased numbers of arriving and departing flights may overwhelm the host nation airspace control system. In cases where no airspace control facilities exist, the JTF may have to establish an interim airspace coordination system, to include—

- Broad policies and procedures.
- Strategic and theater airlift requirements.
- Airspace management procedures.
- Procedures to coordinate both military and civilian sorties.

The JTF may or may not have air control authority over incoming NGO, PVO, and IO flights. Close coordination and agreements with NGOs and PVOs over control of NGO, PVO, and IO cargo flights reduce airspace safety concerns and add to the efficiency of delivering HA supplies.

COORDINATION WITH RELIEF AGENCIES

Coordination with the host nation and a wide variety of relief organizations lies at the core of HA operations. Mission success depends on the US military turnover of HA responsibilities, including security, to the host nation or relief organization. Close coordination improves this process. Figure 4-3 does not attempt to illustrate all levels of liaison and coordination among participating agencies. It does, however, illustrate the many sources of input to the JTF in HA situations. CJTF options for this coordination use the HAST, the HOC, and the CMOC, which fall under the cognizance of the J3 and J5 staff sections.

Humanitarian Operations Center

To coordinate military operations with the requirements of the host nation or NGOs, PVOs, and IOs, the CJTF can request that a HOC be created. The HOC, if created, is usually collocated with the appropriate headquarters, such as the UN, conducting the operation. HOC functions include—

- Developing an overall relief strategy.
- Identifying and prioritizing HA needs to the JTF.
- Identifying logistics requirements for NGOs, PVOs, and IOs.

The HOC is not as much a location or cell as it is a *policy-making and governing body*. In the military sense, the HOC does not command and control but attempts to build a consensus for team-building and unity of effort.

The HOC should consist of decision makers from the military forces command (JTF), UN agencies, DOS (USAID [OFDA DART]), regional NGO and PVO representatives, ICRC, and host nation authorities. The HOC coordinates activities and does not necessarily control. The organization of the HOC appears in Figure 4-4.

The HOC normally has a UN director and deputy directors from the JTF and OFDA DART. Within the HOC the policy-making body is the standing liaison committee, which is comprised of UN, JTF, OFDA DART, and NGO and PVO representatives. HOC core groups and

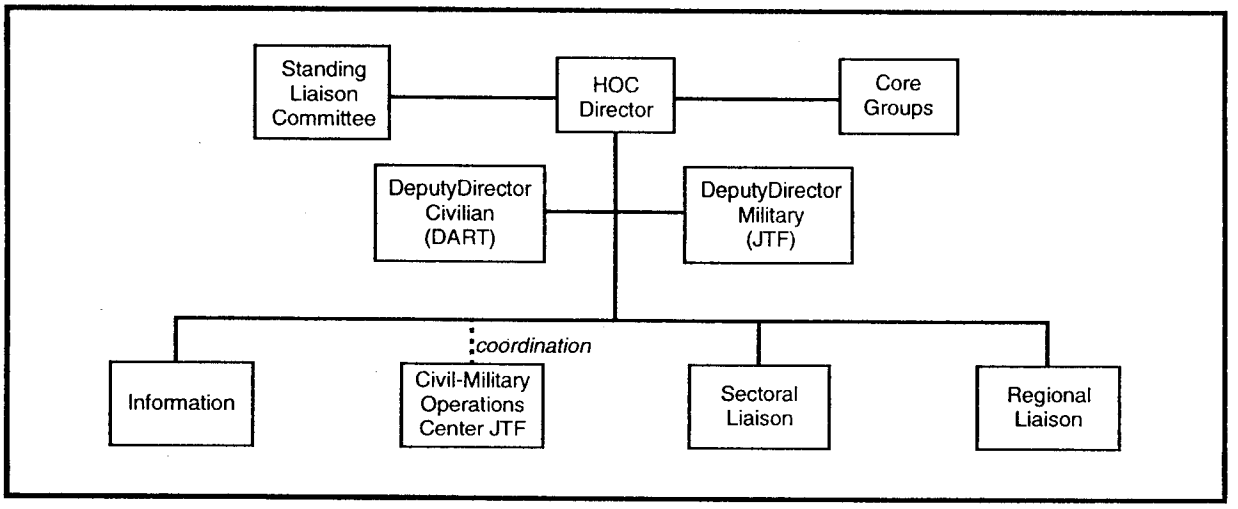

Figure 4-4. Humanitarian Operations Center Organizations

During Exercise Emerald Express conducted in January 1994, the 1st Marine Division used personnel and equipment from its artillery regiment to coordinate HA operations. This innovative concept was explored first because the mission-essential task list (METL) paralleled the requirements for HA coordination (for example, the skills matched), second, the artillery regiment was under utilized during previous HA missions, and third, much of the artillery unit equipment (transportation and communications) was extremely useful during HA operations.

The liaison and coordination skills essential to fire support teams applied directly to HA. At the same time, the supporting perspective possessed by every artillery officer transferred directly to a military role in support of NGO and PVO food distribution. Additionally, it was unnecessary to establish ad hoc teams to meet coordination and liaison requirements because these units already existed.

Based on discussions with

committees meet to discuss and resolve issues related to topics such as medical support, agriculture, water, health, and education.

Civil-Military Operations Center

At the tactical level, the CJTF can form a CMOC as the action team to carry out the guidance and decisions of the HOC. The CMOC is a group of service members that serve as the military's presence at the HOC, as well as the military liaison to the community of relief organizations. Normally, the CMOC director is also the HOC's military deputy director. Figure 4-5 shows the organization of a CMOC.

The CMOC performs the liaison and coordination among the military support capabilities and the needs of the HA organizations. The CMOC, in coordination with OFDA DART, receives, validates, and coordinates requests from NGOs, PVOs, and IOs. The CMOC usually consists of 8 to 12 persons; however, its size is mission-dependent. The commander may add elements as appropriate.

A proposed layout for an effectively organized CMOC is included as Figure 4-6. This configuration is based on lessons learned from previous large-scale HA operations and can be modified as the situation requires. Communications capabilities are an essential component of the CMOC and should be carefully prioritized. The CMOC supports NGOs, PVOs, and IOs by responding to validated logistical and security support requirements. During CMOC meetings (usually daily), the CMOC identifies JTF

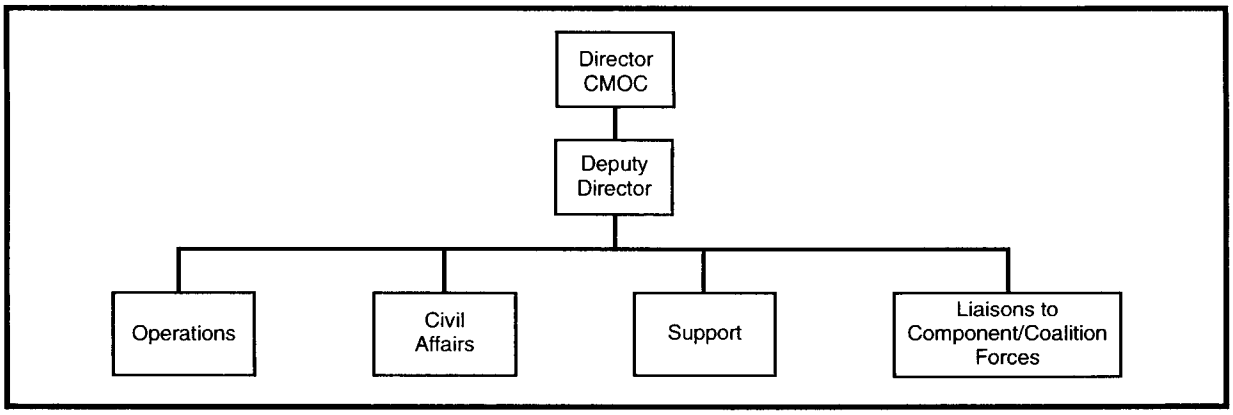

Figure 4-5. CMOC Organization

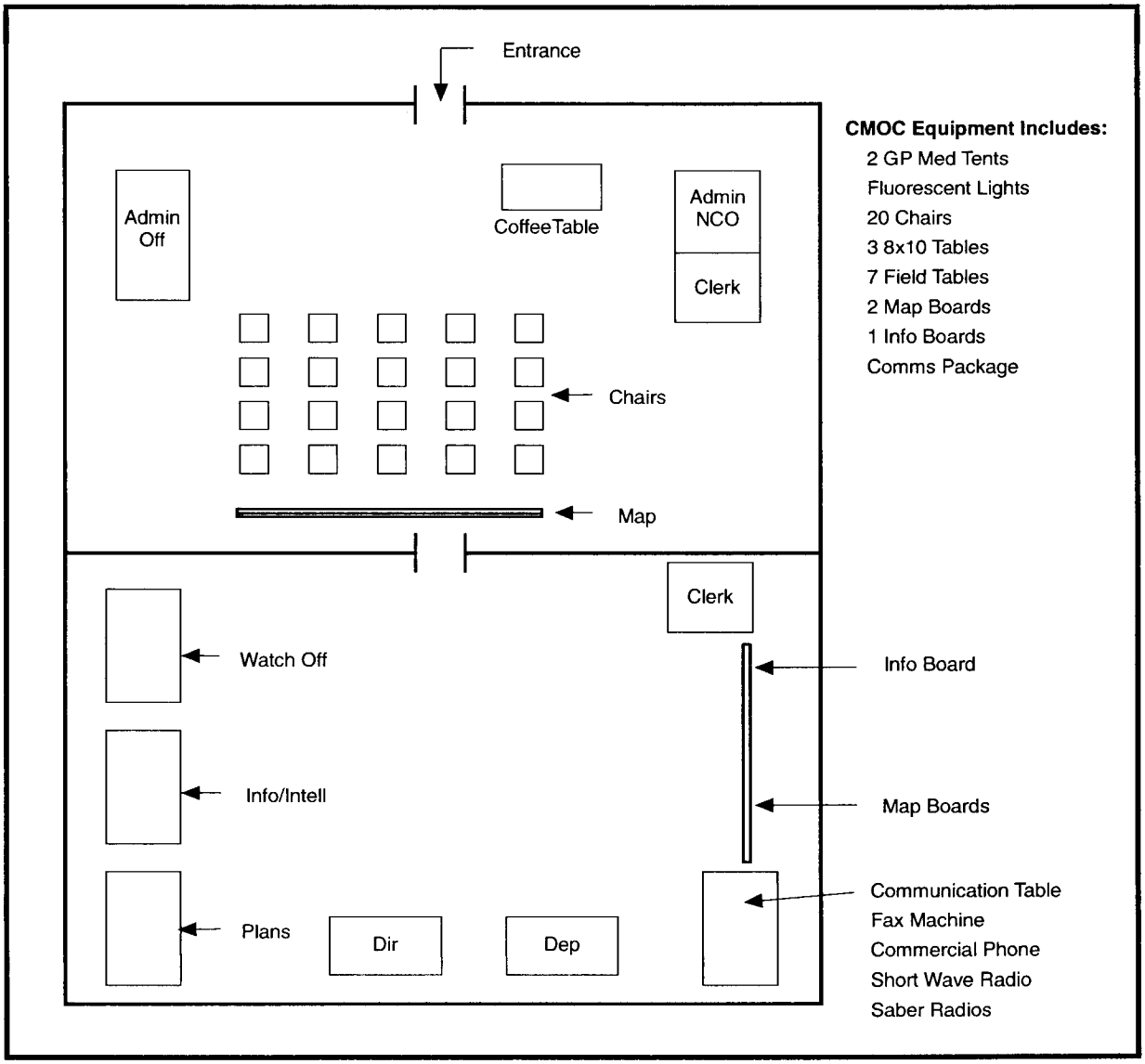

Figure 4-6. Proposed CMOC Layout

components that are capable of fulfilling the requests to support the NGOs, PVOs, and IOs. Validated requests go to the JTF operations cell and then to the component or coalition force LNO for action. The CMOC may—

- Validate the support request in the absence of the OFDA DART representative.
- Coordinate military requests for military support with various military components and NGOs and PVOs.
- Convene and host *ad hoc* mission planning groups involving complicated military support, numerous military units, and numerous NGOs and PVOs.
- Promulgate and explain JTF policies to NGOs and PVOs.
- Provide information on JTF operations and general security operations.
- Serve as a focal point for weapons policies.
- Administer and issue NGO and PVO identification cards.
- Validate NGO, PVO, UN, and ICRC personnel required for JTF aircraft tarmac space, space availability (seats on military aircraft), and access-related issues.
- Coordinate medical requirements.
- Chair port, rail, and airfield committee meetings for space and access-related issues.
- Maintain 24-hour operations.
- Maintain contact with regional and sector CMOCs.
- Support CA teams, as required.
- Facilitate creation and organization of a food logistics system for food relief efforts.

Normally, NGO and PVO requests come to the CMOC for action. The proposed NGO and PVO support request flow is based on operational lessons learned.

DISPLACED PERSONS AND REFUGEES

During many HA scenarios, shelter or housing may need to be provided to displaced individuals. A good reference for administration

Support Request Flow

NGOs and PVOs—

- Prepare complete support request
- Submit request to DART/CMOC
- Monitor

DART—

- Validates requests
- Submits requests to the CMOC

CMOC—

- Logs requests
- Assigns project number
- Prioritizes
- Prepares project folder
- Submits project folder to joint operations center (JOC)
- Monitors

JTF JOC—

- Receives project folder and logs request
- Approves request (uses the attached CA team to analyze the project and apportion the resources to complete the project)
- Prepares detailed tasking order (file in folder)
- Publishes detailed tasking order
- Retains folder and monitor

Individual unit providing support—

- Receives mission
- Analyzes the requirements
- Commits the resources
- Annotates resources expended
- Completes the mission
- Prepares after-action reports with all information
- Submits after-action reports to the JOC

JOC—

- Receives after-action report from the unit and files in folder
- Closes out folder
- Returns folder to CMOC

CMOC—

- Receives folder
- Sends completed report to the NGO or PVO that requested the project. The forms used in the CMOC may include DA 1594 (Staff Duty Journal, Conversation Record) and the locally produced NGO/PVO Support Request Form.

of camps is found in the *UN HCR Handbook for Emergencies.* The UN designates several categories of *affected and displaced person programs.* These include externally displaced refugees, displaced populations within a country, and affected populations within a country. CA personnel are trained to establish and administer displaced person and refugee camps.

The requirements for dealing with refugees and displaced persons are extensive. The key UN agency, when dealing with agencies, is the UNHCR. Cultural and religious requirements, acceptable food, medical support, proper registration, categories of refugees and displaced persons, security, camp locations, sanitation, and funding sources constitute some of the concerns. The ultimate goal is to return the refugee population to its home.

POLITICAL-MILITARY ADVISORS

The JTF should work closely with embassies of coalition nations as well as with US embassies in the region. In multinational operations, coalition forces may provide political advisors to their national headquarters. US forces may have a foreign service officer assigned to support operations. The assignment of political advisors provides a direct link to US embassies, DOS, and the political representatives of coalition nations.

LIAISON

Liaison requires extensive personnel and equipment assets in an HA operation. Liaison personnel and teams must be able to communicate with their parent command as well as make certain decisions or commit to carrying out assigned tasks. Liaison personnel should have direct access to their parent command, be kept informed of events and intentions, and be able to brief capabilities and limitations of their commands.

In coalition operations, liaison personnel should be exchanged with the larger contingents of military forces assisting in the operation. The CMOC provides the primary liaison for the JTF with NGOs and PVOs, the UN, and ICRC; although liaison throughout the AO is critical. Due to the presence of ICRC and NGOs and PVOs, liaison may be established with selected NGOs and PVOs, ICRC, and UN agencies. A reference chart of the US military rank structure and insignia is provided in Appendix I.

> The need to provide quality personnel on liaison teams cannot be overemphasized. This lesson learned echoed at every level of the CTF. It is critical in joint and combined [multinational] operations to ensure an effective liaison system is in place. Liaison personnel must be highly competent, have direct access to their parent command, and be kept informed of events and intentions.
>
> The teams with initiative; the trust and confidence of their commands; solid access and communications; and knowledgeable, bright personnel greatly enhanced the functioning of the entire organization. Extensive positioning of liaison personnel throughout Turkey and in the provinces along the Iraq-Turkey border permitted the CTF to coordinate efforts, which made for more efficient operations and a closer sense of cooperation, especially on a number of politically sensitive issues. Quality liaison personnel paid dividends in this role.
>
> Report on Operation Provide Comfort

REDEPLOYMENT

Redeployment decisions are based on political and military considerations. The JTF provides assessments for the military. The DOS representative provides the political considerations. The CINC uses this information to recommend redeployment plans to the JCS and NCA.

Simultaneous to JTF deployment, the CJTF should begin planning redeployment. Redeployment considerations depend on whether the JTF has accomplished all or some of its objectives. Redeployment of JTF forces begins as soon as objectives are accomplished or the need for

military forces diminishes. Forces not needed to accomplish certain objectives should be redeployed as soon as possible. For extended operations, the CJTF should establish a rotation policy.

The JTF should transfer its HA functions to host nation NGOs and PVOs, the UN, and/or ICRC as soon as possible. As this is accomplished, forces are freed to redeploy. As the operation progresses, political and military guidance will identify functions and units that need to remain in order to accomplish objectives not achieved. The requirement for the JTF to continue supporting HA operations must be identified earlier. This identification affects how the JTF plans for redeployment.

TRANSITION AND/OR TERMINATION

Transition in HA operations involves the transfer of responsibilities and functions to another organization. Transition can occur between service components within the JTF or from the JTF to the UN or host nation. Transition and/or termination is initiated once objectives have been met and authority has been received from national decision makers.

In HA operations, transition presents complex problems. If forces within the JTF are transitioning functions between service components, then the requirements follow standard military handover. If transition involves the JTF transitioning functions or areas back to the host nation, coalition forces, or a UN command, then the requirements may become less clear.

A transition plan is useful. It helps the staff identify transition issues. It is especially important to identify those parties or agencies that will receive functional responsibilities from the JTF. Considerations include which staff sections will write annexes, based on what the UN or transitioning organization will do. The transition plan should identify task force organization, operating procedures, and transition recommendations and considerations. In implementing the transition plan, the transitioning parties should discuss criteria for transferring operations. The plan should be unclassified, clear, and concise, without military jargon.

> Military operations end when the objectives have been attained. The NCA define conflict termination objectives and direct the cessation of operations. Termination plans are designed to secure the major policy objectives that may be attained as the result of military operations. Termination plans must cover the transition to postconflict activities and conditions as well as disposition of military forces. Operation plans and termination plans should normally be prepared together, with the termination plan included as a supporting plan to the operation plan.
>
> Extract from Joint Pub 5-0

One method of transitioning is by function. Another method is by locale. If possible, the transition process should be event-driven and not tied to calendar dates. Functions or areas would transfer only when a similar capability becomes available or is no longer needed. Procedures for transfer of equipment or supplies, either between components of the JTF or with the UN or host nation, must be determined.

JTF planners must identify fiscal guidance, reconstitution of assets, and availability and use of operations and maintenance funds. Several functional areas identified for transition include logistics, medical services, communications, local security, and engineer services. The JTF should develop a series of criteria on transition to be able to track the progress being made. This process may be measured by a statistical analysis of trends; for example, a reduction in infant mortality rates. Figure 4-7 is an example of transition categories and indicators from Operation Restore Hope.

	Categories				
	Humanitarian relief	**Populace**	**Transition actions**	**Infrastructure**	**Resistance**
Indicators	• Unescorted convoys • Relief warehouse security	• Civil-military coordination • Establishment of local councils • Marketplace food shortages • Local security force	• Identification of sector force • Establishment of liaison • Conduct of multi-national operation • Conduct of relief in place	• Airports • Seaports • Public health • Water sources • Main supply routes	• Breaches of agreements • Crew-served weapons • Weapons visibility

Figure 4-7. Operation Restore Hope Transition Indicators

The important part of choosing indicators is choosing the right ones and having a consistent method of measuring them. Some indicators may be weighted more than others, and their importance may shift due to political, military, or HA considerations. The transition plan phases are shown in Figure 4-8.

After conducting a major HA mission, the HA team should address two areas: documentation of lessons learned and what can be termed *after-operation follow-up*. Lessons learned should be collected in whatever format applies for the specific operation. That may mean collection under the joint system through the Joint Universal Lessons Learned System (JULLS) or through individual service systems such as the Army's Center for Army Lessons Learned (CALL). Whenever possible, commanders should specify which system is to be used early in the operation, so that data can be collected in the required format. Appendix J provides lessons learned from four HA operations compiled by USAID/OFDA from the perspective of participating civilian agencies.

The after-operation follow-up would include any action by US military forces that return to the affected area to measure the long-term successes of the mission. For example, three to six months after a large quantity of medical supplies and equipment had been transferred to host nationals in a disaster area, the geographic CINC might direct a medical survey team to return to the area. The team could determine the extent of the usefulness of particular medicines, the appropriateness of the training provided on particular pieces of equipment, and the requirement for additional actions. JTF planners should incorporate lessons learned during the after-operation follow-up in the same lessons-learned system that was used for the original HA mission.

- **Phase I.** UN command or host nation established. A UN command is established or the host nation government is prepared to begin assuming responsibility for HRSs.
- **Phase II.** UN headquarters or host nation assumes C^2. Staff elements of UN or host nation familiarize themselves with the mission, HRSs, the relief effort, and general situation. The UN begins assuming duties and responsibilities of the JTF. C^2 is established and functioning.
- **Phase III.** Change of command; nonessential US forces withdrawn. Commander of UN forces or host nation government able to assume functions of the JTF. All nonessential US forces are withdrawn from the area.

Figure 4-8. Transition Plan Phases

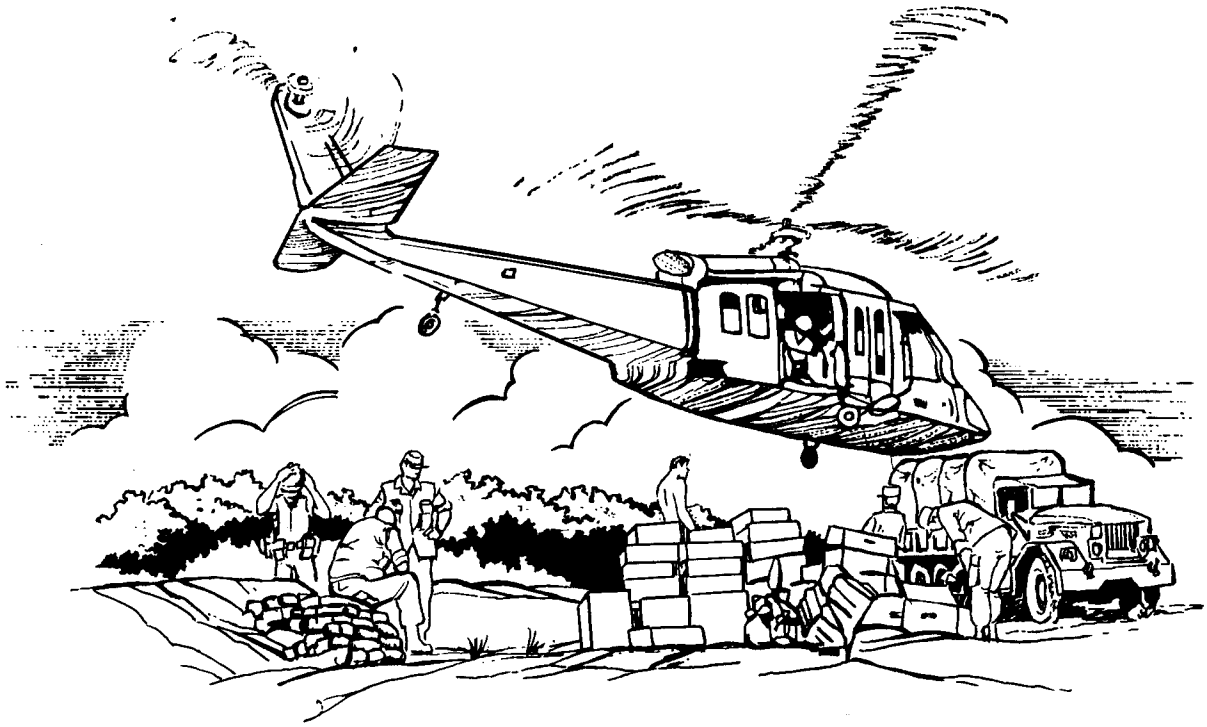

Chapter 5

DOMESTIC OPERATIONS

Domestic HA operations include military support to civil authorities (MSCA) in the event of a disaster or emergency. This chapter offers insight into the differences between foreign HA support operations and MSCA. The NCA direct both MSCA and international HA operations. The primary difference between these operations is that during MSCA operations military support supplements rather than replaces civil agency operations. Local civil authorities are primarily responsible for the security and welfare of their citizens. They request assistance from county, state, or federal agencies when their resources are insufficient. MSCA support is organized on the *unmet* needs philosophy.

A disaster or domestic emergency that requires MSCA is any event that threatens to or actually inflicts damage to property or people. An example of a natural disaster might be a hurricane, earthquake, flood, or fire. An example of a man-made disaster might be a hazardous chemical spill, radiological accident, or massive electrical power disruption. Domestic emergencies include civil defense emergencies, environmental disasters, and mass immigration emergencies. A disaster or domestic emergency may overwhelm the capabilities of a state and its local governments.

LEGAL AUTHORITY

A significant difference between foreign HA and MSCA involves laws. During foreign operations commanders must be concerned with international laws, including the Geneva and Hague Conventions and applicable agreements, customs, and plans.

POSSE COMITATUS ACT

While conducting MSCA operations, commanders must be aware of and follow the tenets of the *Posse Comitatus Act* (18 US Code, Section 1385), as well as the directives, statutes, and regulations that support the civilian agencies and law enforcement organizations. The *Posse Comitatus Act* prescribes criminal penalties for use by the US Army or Air Force to execute the laws or perform civilian law enforcement functions within the US. DOD policy extends this philosophy to the US Navy and Marine Corps. Exceptions to the act are discussed in FM 100-19[1], AFP 110-3[2], and AFR 55-35[3].

NATIONAL SECURITY STRATEGY

Congress and the NCA have directed that the military should become more engaged in supporting domestic needs. In addition, the *National Security Strategy* affirms that national security must be viewed in the context of the nation's well-being, acknowledging the inherent capabilities the military possesses for supporting federal, state, and local governments. The fundamental tenet for employing military resources is the recognition that civil authorities have the primary authority and responsibility for disaster assistance. The National Guard, in state active duty status (Title 32 of the US Code), has primary responsibility to provide military disaster assistance in its state.

STAFFORD ACT

Under the authority and provisions of the *Robert T. Stafford Disaster Relief and Emergency Assistance Act,* the Federal Emergency Management Agency (FEMA) coordinates the federal government's response to state and local authorities for disasters and civil emergencies. The support that DOD provides under the provisions of the *Stafford Act* is on a reimbursable basis. Commanders must properly manage incremental costs associated with disaster assistance and expend resources properly.

FEDERAL RESPONSE PLAN

DOD most often provides disaster assistance to other agencies in accordance with the Federal Response Plan (FRP). This plan describes how the federal government responds to a declared disaster in order to save lives and safeguard property. Along with DOD, 26 other federal agencies provide support when the FRP is fully implemented. The FRP groups the types of disaster assistance into 12 functional areas called emergency support functions (ESFs). During disaster response operations, some or all of these ESFs may be activated. The FRP assigns responsibility for each of the 12 ESFs to a lead agency, based on that agency's authority or capability. Each ESF also has assigned supporting agencies. DOD is the lead federal agency for one ESF: public works and engineering. DOD is a supporting agency in the remaining ESFs. Consequently, DOD may have resources committed in all 12 ESFs. See Figure 5-1.

The FRP is designed to address the consequences of any disaster or emergency situation in which a need exists for federal response assistance under the authorities of the *Stafford Act.* The plan describes basic mechanisms and structures by which the federal government mobilizes resources and conducts activities to augment state and local response efforts. Federal assistance is provided to the affected state or area under the management of FEMA and the overall coordination of a federal coordinating officer (FCO) appointed by the director of FEMA on behalf of the President.

Public Works and Engineering Support

Public works and engineering support includes technical advice and evaluations,

1. *Domestic Support Operations,* 1 July 1993.
2. *Civil Law,* December 1987.
3. *Air Force Assistance to Civilian Law Enforcement Officials,* December 1986.

No.	1	2	3	4	5	6	7	8	9	10	11	12
ESF / ORG	Transportation	Communication	Public Works & Engineering	Firefighting	Information & Planning	Mass Care	Resource Support	Health & Med Services	Urban Search & Rescue	Hazardous Materials	Food	Energy
USDA	S	S	S	P	S	S	S	S	S	S	P	S
DOC		S	S	S	S	S	S			S		
DOD	S	S	P	S	S	S	S	S	S	S	S	S
DOEd					S							
DOE	S		S		S		S			S		P
DHHS			S		S	S	S	P	S	S	S	
DHUD						S						
DOI		S	S	S	S					S		
DOJ					S			S		S		
DOL			S				S		S	S		
DOS	S									S		S
DOT	P	S	S		S	S	S	S	S	S	S	S
TREAS					S							
VA			S			S	S	S				
USAID								S	S			
ARC					S	P		S			S	
EPA			S	S	S			S	S	P	S	
FCC		S										
FEMA		S		S	P	S	S	S	P	S	S	
GSA	S	S	S		S	S	P	S	S	S		S
ICC	S											
NASA					S							
NCS		P			S		S	S				S
NRC					S					S		S
OPM							S					
TVA	S		S									S
USPS	S					S		S				

P – Primary agency – responsibile for management of the ESF
S – Support agency – responsible for supporting the primary agency

Figure 5-1 Emergency Support Assignment Matrix

engineering services, potable water, construction management and inspection, emergency contracting, emergency repair of waste water and solid waste facilities, and real estate support as required. Activities within the scope of this ESF include emergency clearance of debris, temporary construction of emergency access routes, emergency restoration of critical public services and facilities, emergency demolition or stabilization of damaged structures and facilities, technical assistance and damage assessment, and support to other ESFs. The US Army Corps of Engineers (USACE) is the operating agent for planning, preparedness, and response operations on behalf of DOD for this ESF.

Other Emergency Support Functions

DOD support to other ESFs under the FRP may come from one of two sources. First, when the primary agency for an ESF determines that it requires support or resources from outside its own agency, that agency may coordinate with FEMA through its regional and national headquarters for the required support or resources. FEMA then determines how to provide the required support or resources from any source nationwide. DOD, as a designated supporting agency, may be tasked. Second, the FCO may task DOD to provide the required support or resources from military assets already within the disaster area or available through DOD channels. The FCO gets this support through coordination with the defense coordinating officer (DCO).

RESPONSIBILITIES

The Secretary of the Army (as the DOD executive agent), the DOD director of military support (DOMS), and the unified commands coordinate military support for domestic operations.

EXECUTIVE AGENT

The DOD executive agent is defined by DOD Directive 3025.1,[4] which states that the Secretary of the Army is the DOD executive agent for the provision of DOD resources to civil authorities. The DOD executive agent has the authority of the SECDEF to task DOD components to plan for and commit DOD resources in response to requests for MSCA.

DIRECTOR OF MILITARY SUPPORT

The DOMS and his supporting staff ensure the performance of all planning and execution responsibilities of the DOD executive agent for domestic emergency preparedness. DOMS is the DOD primary contact for all federal departments and agencies during periods of domestic civil emergencies or disaster response. The chain of command is depicted in Figure 5-2.

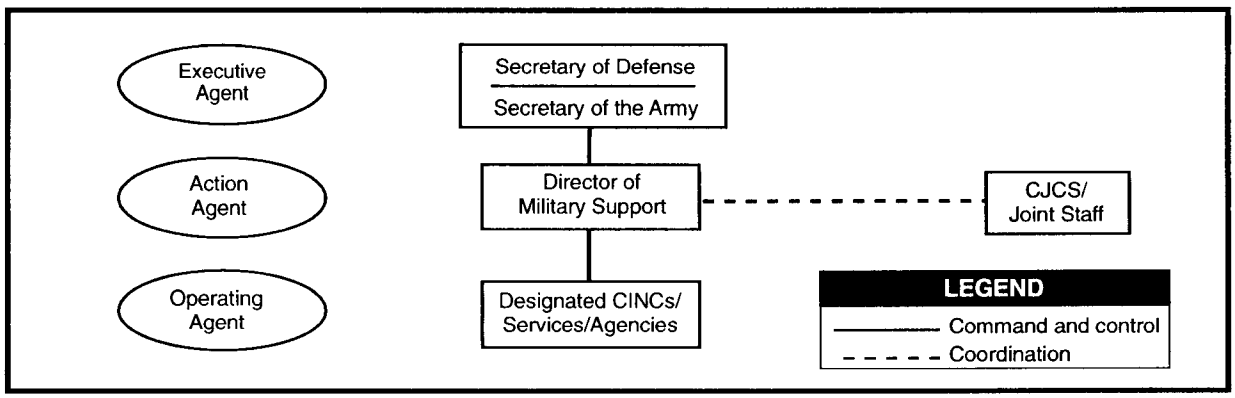

Figure 5-2. Domestic Chain of Command

4. *Military Support to Civil Authority,* January 1993.

UNIFIED COMMANDS

The following selected commands have domestic support responsibilities: Atlantic Command (USACOM), Pacific Command (USPACOM), and USTRANSCOM. In addition, the US Special Operations Command (USSOCOM) may be tasked as a supporting CINC.

Commander in Chief, Atlantic Command

CINCUSACOM serves as the DOD principal MSCA planning and operating agent for all DOD components in the 48 contiguous states, the District of Columbia, and all US territories and administrative possessions (Virgin Islands, Puerto Rico) within the Atlantic Command AOR. Commander, US Army Forces Command serves as USACOM lead operational authority.

Commander in Chief, Pacific Command

USCINCPAC serves as the DOD principal planning and operating agent for military support to civil authorities for all DOD components in Hawaii, Alaska, and Pacific territories within the Pacific Command AOR.

Commander in Chief, Transportation Command

USCINCTRANS serves as the DOD single manager for transportation, providing air, land, and sea transportation to meet national security objectives.

DISASTER RELIEF ORGANIZATIONS

In the event of a disaster, relief assistance is first provided by local emergency organizations. The next level of disaster assistance is provided by state organizations, including the state National Guard. States prepare plans to respond to disasters within their jurisdictions. Each state has an office of emergency services (OES) or a similar agency responsible to its governor for coordinating the state's efforts in disaster response situations.

State Organizations

Prior to or immediately following a disaster, the state activates an emergency operations center (EOC) to begin gathering information, assessing damage, and advising the governor of the disaster situation. The state OES, through its EOC, coordinates the local and state disaster response operations. In every case, the state's adjutant general and National Guard have a key role in disaster assistance. If local and state capabilities are insufficient, then the state governor can request a Presidential declaration of major disaster or emergency for commitment of federal resources. At that time, FEMA takes the lead as the coordinator of federal disaster assistance.

Federal Organizations

While FEMA is the lead federal agency in most disaster scenarios (hurricanes, earthquakes, floods), the Department of Energy (DOE) has the lead for civil radiological emergencies. In accordance with the *National Oil and Hazardous Substance Contingency Plan,* the Environmental Protection Agency and US Coast Guard share the federal lead for hazardous chemical spill response that includes oil spills.

Following a Presidential declaration of a major disaster or emergency under the provisions of the FRP, the President appoints an FCO to manage the federal assistance efforts. The DCO, appointed by the supported CINC, serves as the principal DOD point of contact at the disaster field office for providing military support in disaster assistance. The decision sequence for disaster support is illustrated at Figure 5-3.

Regardless of the disaster scenario, however, DOD should be prepared to provide its resources to support the lead federal agency. As an example, the US Army Chemical Corps is trained to deal with radiological and chemical disasters. The Secretary of the Army, as the DOD executive agent, coordinates with CJCS and the joint staff and issues an execute order, through DOMS, to the appropriate CINCs, services, and agencies.

Imminently serious conditions resulting from a disaster or domestic emergency may

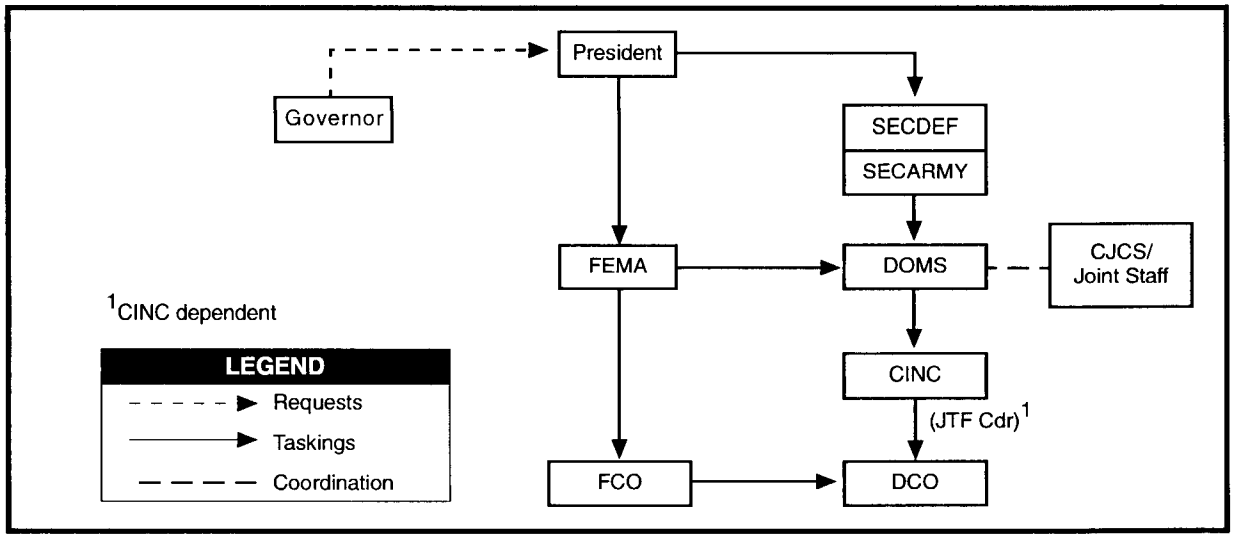

Figure 5-3. Decision Sequence for Disaster Support

require immediate action by military commanders to save lives, prevent human suffering, or mitigate great property damage. When such conditions occur and time does not permit approval from higher headquarters, military commanders are authorized to respond to requests of civil authorities. All such necessary action is referred to as immediate response.

Immediate response is a short-term emergency supplement to government authorities. These actions do not supplant established DOD plans for providing support to civil authorities. Commanders may use immediate response authority to assist in the rescue, evacuation, and emergency treatment of casualties; in the restoration of emergency medical capabilities; and in the safeguarding of public health. Commanders may also elect to assist in the provision of essential public services and utilities. Commanders use their assessment of mission requirements and the capabilities of their commands to judge the extent of immediate assistance they choose to provide.

Immediate response by commanders does not take precedence over their primary mission. Commanders notify their senior commander and seek guidance for continuing assistance whenever DOD resources are committed under immediate response circumstances. Although immediate assistance is given with the understanding that its costs will be reimbursed, it should not be delayed or denied when the requestor is unable to make a commitment to reimburse. When the President determines that federal assistance will be provided in response to a natural or man-made disaster, the military commander continues to provide immediate response assistance, adjusting his operations to conform with the tasks assigned by his higher headquarters and/or within the FRP.

DEFENSE COORDINATING OFFICER

The supported CINC appoints the DCO. The DCO serves as the central point of contact in the field to the FCO and ESF managers regarding requests for military support. The Commander, US Army Forces Command—as USACOM lead operational authority—usually tasks the continental United States Armies (CONUSAs) to conduct planning and coordination for disasters and domestic emergencies as well as to appoint DCOs following a disaster declaration. The DCO supervises the defense coordination element, a staff that can support both the administrative and ESF functional areas (1 through12) for all coordination and decisions. At the discretion of the CINC, the DCO may assume control of all federal military units involved in the disaster.

STATE COORDINATING OFFICER

The state coordinating officer (SCO) represents the governor and is responsible for emergency management, disaster response, and recovery activities. The state coordinating officer is the primary point of contact for the FCO in facilitating disaster assistance.

The state area command (STARC) has developed disaster emergency plans in coordination with other state and local agencies. The STARC and DCO establish liaison so that local, state, and federal activities can be coordinated and managed effectively. The STARC can assist the federal forces with contracting support as well as logistical support from National Guard resources not otherwise committed.

JOINT TASK FORCE

The severity of the disaster may warrant the establishment of a JTF to provide comprehensive support. The DCO continues to serve as DOD's central point of contact for all requests for military support from the FCO and ESF managers. The DCO's expertise and constant liaison with the FCO, local officials, and other ESF managers become critical to the effective coordination and integration of the federal and state disaster assistance efforts. The CINC may designate the DCO as the CJTF. If the size of the JTF expands and the CINC designates another, more senior, officer as the CJTF, then the DCO becomes a special staff officer for the CJTF

DISASTER ASSISTANCE

The military role in domestic emergencies is well defined and by law is limited in scope and duration. Military resources temporarily support and augment, but do not replace local, state, and federal civilian agencies that have primary authority and responsibility for domestic disaster assistance. Command relationships for disaster relief response are depicted in Figure 5-4.

PLANNING CONSIDERATIONS

Commanders can best prepare for disaster assistance operations by understanding the appropriate laws, policies, and directives that govern employing the military in domestic emergencies. The military does not stockpile resources intended solely for domestic disaster assistance. Also, special authorization must be granted to use military medical assets to treat civilians. In summary, disaster planning and coordination must occur between appropriate agencies at the appropriate level, such as between DOMS and FEMA, and between CINCs and regional federal agencies or states.

DISASTER RELIEF STAGES

Domestic disaster operations are normally conducted in three stages: response, recovery, and restoration. The role of the military is most intense in the response stage, decreasing steadily as the operation moves into the recovery and restoration stages.

Response

Response operations focus on those life-sustaining functions required by the population in the disaster area. Immediate response is discussed previously in this chapter.

Recovery

Recovery operations begin the process of returning the community infrastructure and services (both municipal and commercial) to a status that satisfies the needs of the population.

Restoration

Restoration is a long-term process that returns the community to predisaster normalcy. While the military has an important role in the relief and recovery stages, restoration is primarily a civilian responsibility. Military forces will redeploy as operations transition from the response and/or recovery stage to the restoration stage.

ASSESSMENT

When a disaster is imminent or has occurred, the assessment of the potential or real damage and the anticipated military support requirements must precede the commitment of military resources. This ensures both the efficient use of limited

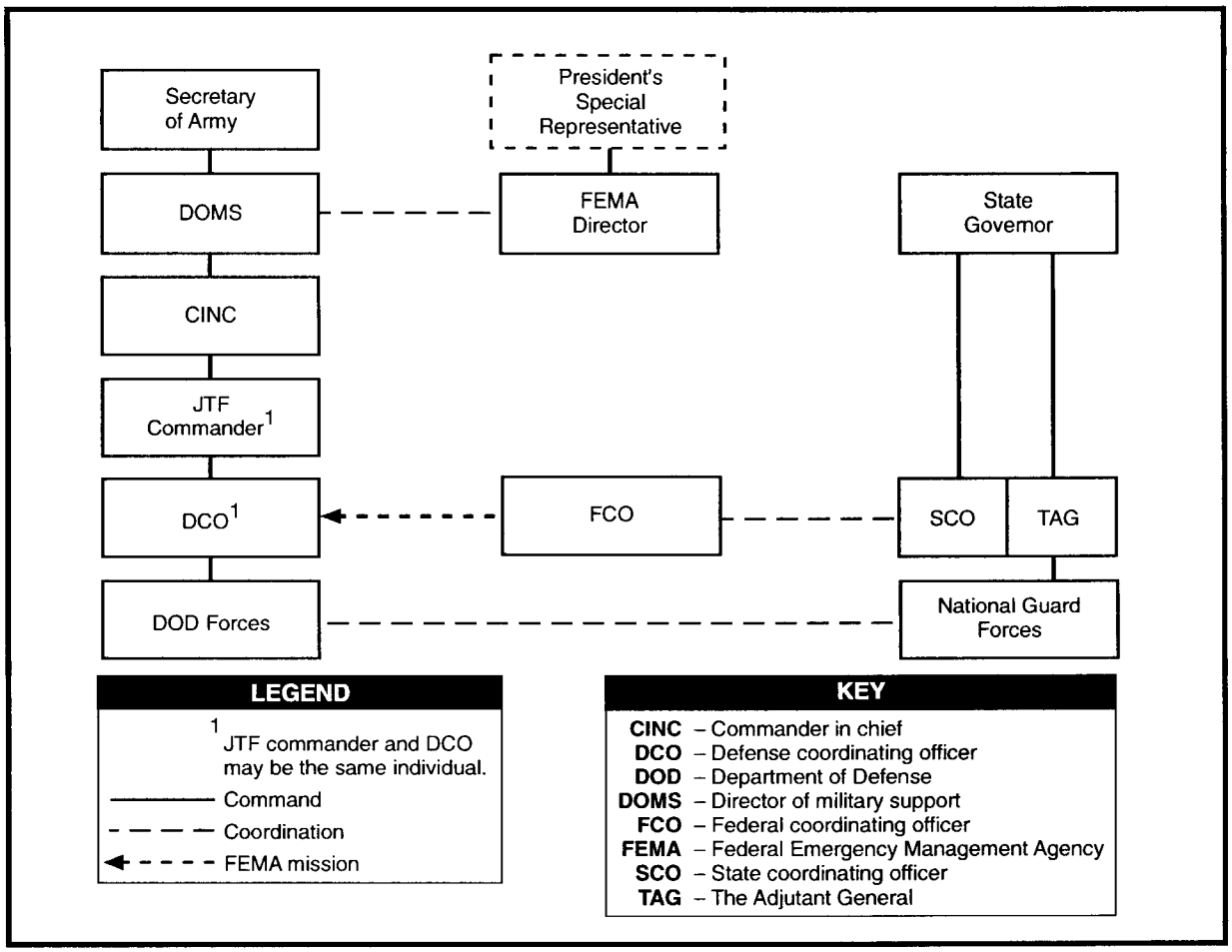

Figure 5-4. MSCA Command Relationship

deployment assets and that the resources/forces deployed are appropriate for the mission. This assessment responsibility is shared by federal, state, and local agencies and military services.

The earliest information requirements for the assessment process must include the impact on the population, available critical infrastructure facilities, and any serious environmental hazards. The status of the road/rail systems, airports, and ports must be determined. Identifying major fires, hazardous chemical spills, ruptured petroleum/natural gas pipelines, and downed electrical power lines, especially in populated areas, is a priority. Determining the status of local emergency services, police, firefighters, and health service providers is essential.

As the federal relief effort escalates, including the deployment/employment of federal military resources in the disaster area, critical relief facilities must be made operational and accessible. These facilities include municipal offices, hospitals, water treatment plants, sanitary waste disposal facilities, ice manufacturing and storage plants, electrical power stations and lines, and telecommunications nodes. Sites for the emergency shelter, feeding, and medical treatment of displaced civilians must be identified and prepared. These life support centers are required within the first few days after a disaster. Sites for the reception, storage, and distribution of supplies in the affected area must be identified.

Assessment is a fundamental task for providing effective disaster assistance. The assessment process requires the integration and analysis of information from many different sources. This process is not

exclusively a DOD responsibility. It is first and foremost a local and state agency task. Federal agencies, including DOD, assist and cooperate in the information-gathering and assessment process.

Laws limit the types and ways military agencies can gather information in domestic situations. Commanders must ensure that all requests for information, both before and during a domestic emergency, comply with the applicable laws and are handled in the appropriate military channels.

TERMINATION

The military's role in disaster assistance must end as soon as practical. The objective of the federal disaster response effort is to assist the local community to return to a self-sustaining status. Consequently, the military should expect to be heavily committed during the response phase of the operation. The military's involvement decreases progressively during the recovery phase. As a principle, the military does not compete with civilian commercial enterprises. As commercial enterprises become more available in the community, the military's provision of support and services must diminish.

Disaster assistance operations require the establishment of end states or conditions to be achieved in determining the completion of disaster assistance missions. Conditions must be definable and attainable.

End states must be developed from the highest (national) perspective down to the lowest county and municipal levels. They provide a road map that all government and nongovernment agencies involved in disaster assistance can follow. The affected local population must know when military operations will terminate or transition to local supporting organizations. Mission success is tied directly to the military's ability to accomplish specific end state objectives.

In conjunction with federal, state, and local officials, commanders at all levels must understand the desired community objectives or goals, which affect the termination standards for the military's involvement, as well as other federal agencies. The return to normalcy requires a progressive downsizing of the military's role.

Military commanders establish termination standards in coordination with the FCO and state and local authorities. Standards must be clearly stated and understood by all. Standards can usually be expressed in terms of percentage of predisaster capability by specific function; for example, 70 percent of electrical power restored. In an operation such as disaster support, redeployment of forces becomes a sensitive issue since it may create misperceptions and anxiety in the population with respect to needed sustained support and the ability of local government and contractors to handle the support as federal forces are redeployed.

The criteria for mission success and completion must be defined, articulated, and disseminated as soon as possible. Civil authorities and military personnel must know when the operation has reached completion and when DOD assets will be withdrawn. Mission success should be directly proportional to the military's ability to accomplish specific milestones. Planners need to identify these milestones in their functional areas and use them to reduce further military support requirements. All parties must understand that even though the mission may not be fully complete from the civilian authorities' perspective, DOD support may have to be replaced by civilian assets and local support organizations to continue the restoration mission.

Appendix A

JTF HUMANITARIAN ASSISTANCE OPERATIONS FROM 1983 THROUGH 1993

This appendix provides a brief overview of HA-associated JTF operations from 1983 through 1993. Classification issues limit several discussions. These discussions do not encompass all JTF HA operations.

JOINT TASK FORCE - ALASKA OIL SPILL

(APRIL-SEPTEMBER1989)

On 24 March 1989, the *Exxon Valdez* ran aground. The next day, military support to cleanup operations began. On 6 April, JTF Alaska Oil Spill (AOS) was established under the command of Lt Gen McInerney, USAF, commander of the Alaskan Air Command. The JTF-AOS staff virtually duplicated that of JTF-AK, the Alaskan command's planned contingency JTF. All four services, as well as the Coast Guard participated in the cleanup before the JTF disestablished.

OPERATION PROVIDE COMFORT TURKEY AND NORTHERN IRAQ

(APRIL 1991 TO DATE)

In early 1991, the NCA directed US military forces to augment private relief efforts in support of Kurdish civilians fleeing northern Iraq into Turkey. The operation began on 5 April 1991 and quickly evolved into a combined humanitarian intervention effort involving supplies and military efforts of over 30 nations and 21,000 troops (7,000 from the US). Through January 1994, coalition forces have delivered 27,000 tons of relief supplies and aid to approximately 850,000 Kurdish people. The operations are ongoing.

SEA ANGEL - BANGLADESH

(MAY 1991)

Following a devastating cyclone (29-30 April 1991), the Amphibious Group Three task force carrying 5th Marine Expeditionary Brigade (MEB) elements returning from Operation Desert Storm provided the major US contribution to relief operations in Bangladesh. The III MEF provided the command element. Operation Sea Angel began on 10 May and involved over 7,000 US soldiers, sailors, marines, and airmen.

FIERY VIGIL - PHILIPPINES

(JUNE 1991)

Following the 12 June 1991 eruption of Mount Pinatubo, US forces evacuated Clark Air Force Base and most personnel from Subic Bay Naval Base. The commanding general, 13th USAF, was in command of the JTF.

GUANTANAMO HAITIAN REFUGEES

(NOVEMBER 1991 - MAY 1993)

USMC forces assumed primary responsibility for emergency HA to Haitian refugees at Naval Base Guantanamo. The commanding general, 2d Force Service Support Group (FSSG) (BG G.H. Walls, Jr., USMC) was the CJTF. The 2d FSSG provided the nucleus for the JTF HQ, and the total force exceeded 1,200 personnel (300 Marines, over 700 Army, 150 Air Force, and local personnel from the Navy Base and Marine Barracks). With interdiction by the US Navy and with Coast Guard assistance, Haitians began to flow into Guantanamo Bay and were housed in a tent city. On 16 December 1991, 300 Marines from the 8th Marine Regiment deployed from Camp LeJeune to Guantanamo to join 400 other military personnel. At peak, the temporary camps at Guantanamo held over 12,500 Haitians.

OPERATION PROVIDE HOPE FORMER SOVIET UNION

(FEBRUARY 1992)

The Commander in Chief, Europe (CINCEUR) formed a JTF to command US airlifts to provide relief in the nations formed from the former Soviet Union.

OPERATION PROVIDE RELIEF KENYA-SOMALIA

(AUGUST 1992 - FEBRUARY 1993)

In late August 1992, the Operation Provide Relief JTF under the command of BG Libutti (USMC) arrived in Mombasa, Kenya. Besides the command element, Provide Relief involved US Army SOF and USAF transport aircraft airlifting relief supplies in remote areas of Kenya and into some Somali towns. In September, the CJCS positioned the 11th Marine Expeditionary Unit (special-operations-capable) [MEU(SOC)] aboard *Phibron One*) off the coast of Mogadishu to provide assistance to the 500-man Pakistani UN contingent. On 15 September, the ships (including LHA-1 *Tarawa)* arrived off Mogadishu. In February 1993, Operation Provide Relief became part of Operation Restore Hope.

HURRICANE ANDREW FLORIDA/LOUISIANA

(AUGUST - SEPTEMBER 1992)

Hurricane Andrew hit on 16 August 1992, causing extensive damage in both Florida and Louisiana. On C-Day, 18 August 1992, JTF Miami began deploying forces from all services to aid disaster-relief operations. Units provided shelter, food, and water and assisted in relief operations. The commanding general, 2d Continental US Army, was the CJTF.

TYPHOON OMAR

(AUGUST - SEPTEMBER 1992)

On 28 August 1992, Typhoon Omar hit the north end of Guam. That day, CINCPAC established JTF Marianas to support disaster relief with the commanding general, 13th USAF, as CJTF. The following day, 1st MEB Marines departed Hickam AFB, Hawaii, to assist the JTF. The Marines off-loaded maritime pre-positioned equipment to aid in the relief operations. Initial relief efforts concentrated on power restoration and water services. Navy and Marine engineers constructed a tent city, repaired schools, and assisted in the general cleanup of Guam. The operations ended on 19 September.

TYPHOON INIKI
HAWAII

(SEPTEMBER - OCTOBER 1992)

Typhoon Iniki hit Kauai on 12 September and damaged an estimated 30 to 90 percent of the island's housing. That day, CINCPAC formed JTF Hawaii, with LTG Corns, commanding general, 25th Light Infantry Division, in command, to assist with relief operations. Army forces from the 25th Light Infantry Division provided most of the military support. 1st MEB prepared generators, bulldozers, forklifts, trucks, water purifiers, meals ready-to-eat (MREs), and Marines for deployment. The *USS Belleau Wood* transported Marine and Army heavy equipment from Oahu to Kauai and provided command and control capability and medical augmentation to the relief effort. CINCPAC ended the JTF on 6 October.

OPERATION RESTORE HOPE
SOMALIA

(DECEMBER 1992 - MAY 1993)

On 2 December 1992, an amphibious task force arrived off Mogadishu. Marines from the 15th MEU landed on 9 December 1992 to initiate Operation Restore Hope. Restore Hope involved more than 28,000 US servicemen and women from all the services, with more than 10,000 coalition forces from 24 nations participating in this operation to create a secure environment for relief operations. On 4 May 1993, CJTF, Lt Gen Johnston, USMC, formally ended Restore Hope with the transition to a UN operation.

OPERATION PROVIDE PROMISE
FORMER REPUBLIC OF YUGOSLAVIA AND BOSNIA-HERCEGOVINA

(FEBRUARY 1993 TO DATE)

USCINCEUR activated Joint Task Force Provide Promise (JTF PP) on 23 February 1993 to support the execution of humanitarian airdrop operations in Former Yugoslavia as directed by the UNHCR. On 26 February 1993, emergency supplies were airdropped in Bosnia-Hercegovina (central Yugoslavia). As 1993 progressed, USCINCEUR expanded the mission of JTF PP to include other tasks such as humanitarian airlift and peacekeeping missions. A forward-deployed task force was established using personnel and equipment

assigned to 502D Mobile Army Surgical Hospital (MASH). USCINCEUR further directed peacekeeping missions in the Former Yugoslavia Republic of Macedonia (FYRM) known as operation Able Sentry, as well as enforcement of a no-fly zone known as Operation Deny Flight. As of January 1994, US and allied forces performed over 2,000 airdrop sorties, including over 12K metric tons of food and 170 metric tons of medical supplies. Airland operations delivered another 83K metric tons of humanitarian aid.

Appendix B

LEGAL ISSUES

The legal issues that surround an HA operation are both significant and complicated. This appendix provides legal lessons learned from previous HA missions.

INTERNATIONAL AGREEMENTS

The JTF commander must be aware of any existing international agreements that may limit the flexibility of the HA mission. Existing agreements may not be shaped to support HA operations. Such was the case during Operation Provide Relief, when third-country staging and forwarding of relief supplies was a major issue. Military HA commanders dealing with host nations and international organizations should anticipate the difficulties that international agreements can impose on HA.

LAW OF ARMED CONFLICT

Normally, the law of armed conflict does not apply to HA operations. However, it is used in conjunction with the Geneva and Hague Conventions, protocols, and custom laws that may provide the CJTF guidance concerning his operations. Guidelines for forces have to be developed from fundamental concepts of international humanitarian law. Mission imperatives and taskings must have a sound legal basis, and commanders must ensure that personnel under their control conform to internationally accepted standards of behavior and action.

The law of armed conflict applies only to combat actions. Specific legal responsibilities associated with armed conflict that also concern HA operations include—

- Care for civilians in an occupied territory.
- Issues concerning civilians and private property.
- Responsibilities concerning criminal acts.

While these specific legal tenets apply only if HA actions progress to open hostilities, JTF commanders may still use them as a basis for determining what is permissive and appropriate concerning civilians, private property, and handling of criminal acts. Air Force Pamphlet 110-31[1] provides details on the law of armed conflict.

Similarly, other legal issues that arise in an HA situation are not governed by other aspects of the law of armed conflict. Somalia was not an *occupied territory* under the terms of the Geneva Convention, for example. However commanders should attempt to address such issues using international laws, including the law of armed conflict, as a guide whenever possible. AFP 110-31 and FM 27-10 provide guidance to the JTF commander.

LAW OF THE SEA

Naval commanders must always render assistance to those in distress on the high seas. For HA operations, naval commanders may be tasked to provide assistance outside the bounds of existing guidelines. For example, in cases where no government or civil authority exists, naval units may be asked to establish a local coastal guard or patrol or take on the responsibilities of harbormaster or harbor control. NWP 9/FMFM 1-10 provides guidance concerning maritime issues that may confront the CJTF.

1. *International Law - The Conduct of Armed Conflict and Air Operations*. November 1976.

RULES OF ENGAGEMENT

The development of ROE for use by the forces assigned to an HA mission is essential to the success of the mission. ROE for HA operations are characterized by restraint. Levels of force, tactics, and, when approved, weaponry, will all be carefully contained. The sensitive political and international nature of HA operations means that the CINC must coordinate the details of HA ROE with the CJTF, which may change as the operation evolves. Under normal circumstances, JCS peacetime ROE apply to all military operations. The CINC, in coordination with the CJTF, must request supplemental measures to deal with specifics of the mission. Actual ROE established for each HA mission will depend on the individual situation and operational environment.

For coalition operations, all participating military forces should establish common HA ROE to provide consistency within the coalition. Individual nations using separate national ROE will respond differently to the same situation. Certain precepts are essential to the concept of ROE for US military forces:

- The right of self-defense must never be prohibited.
- A unit commander will defend against a hostile act or hostile intent.

The two elements of self-defense are *necessity* and *proportionality*. In necessity, a hostile act must occur or there must be hostile intent. Proportionality—the use of force—must be reasonable in intensity, duration, and magnitude to ensure the safety of forces.

Figure B-1 is a sample ROE Card. These notional ROE are based on the ROE established for the US task force in Somalia. These sample ROE would be appropriate only after a decision is made to arm the forces conducting HA. ROE for an unarmed HA mission will differ.

Sample Rules of Engagement Card for US Forces Conducting Armed Foreign HA Missions

Nothing in these rules of engagement limits your right to take appropriate action to defend yourself and your unit.

- You have the right to use force to defend yourself against attacks or threats of attack.
- Hostile fire may be returned effectively and promptly to stop hostile acts.
- When US forces are attacked by unarmed hostile elements, mobs, and/or rioters, US forces should use the minimum force necessary under the circumstances and proportional to the threat.
- You may **not** seize the property of others to accomplish your mission.
- Detention of civilians is authorized for security reasons or in self-defense.

Remember

- The United States is **not** at war.
- Treat all persons with dignity and respect.
- Respect local customs and traditions of the host nation.
- Use minimum force to carry out the mission.
- Always be prepared to act in self-defense

Figure B-1. Sample Rules of Engagement Card

PROPERTY

In some HA operations, military forces are authorized to use all necessary means to facilitate the flow of relief supplies. The lack of restraint under these guidelines may cause tension to escalate in the HA environment. International and national military forces may require public or private property to perform assigned tasks. Use, or even seizure, of private property may be required for specific HA operations.

WEAPONS POLICY

In an HA situation, commanders may need a strategy to disarm the populace to enhance security and reduce crime. Authority to confiscate private property, such as individual privately owned weapons, will have to be addressed. Normally that authority resides with the mandate that established the HA task force.

The objective of the weapons policy may be to disarm segments of the civilian population. Potential methods to accomplish this goal are to—

- Confiscate weapons.
- Ask that weapons be turned in voluntarily.
- Trade weapons for cash or other commodities through weapons incentive programs.

Use of a *weapons policy card* similar to the unclassified version of the ROE card was particularly effective in Operation Restore Hope. UNITAF provided the card to relief agencies that had security forces or employed Somali nationals for security purposes. Its purpose was to highlight what was permitted and prohibited by the weapons policy enforced by UNITAF. Troops were trained on the identification of those persons entitled to carry weapons. In addition, identification cards were issued that permitted designated persons to carry weapons for self-defense. Commanders should decide what types of weapons to confiscate and how to disseminate the policy.

CIVILIAN DETAINEE PROCEDURES

Detention of civilians is normally an issue only in those cases where no local, state, or host nation government exists. However, HA commanders must plan to address the handling of civilian detainees. Key issues include—

- What authority permits detention?
- What conduct warrants detention?
- Who has legal jurisdiction to conduct criminal trials?
- Who will operate the detention facility?
- How will detainees be handled/processed?
- How long will criminals be detained?
- At what point can detainees be transferred to some recognized security police force?

ENVIRONMENTAL CONCERNS

US environmental laws are very strict and apply to all DOD personnel in the performance of their duties throughout the world. Title 40, *Code of Federal Regulations (CFR),* stipulates that military personnel are civilly and criminally liable for violations of EPA regulations. Past experiences with UNHCR and the Federal Yugoslav/Republican Serbian governments provide an interesting dilemma where US military forces were directed to handle and dispose of hazardous (chemical) and biological wastes not in accord with EPA and OSHA regulations. However, these wastes were not unlawful under UN regulations and Yugoslav/Serbian law. US forces operating in HA must follow EPA and OSHA regulations.

Appendix C

LISTING OF NONGOVERNMENTAL AND PRIVATE VOLUNTARY ORGANIZATIONS

This appendix briefly describes a cross section of NGOs and PVOs the JTF may encounter during HA operations. While not inclusive, this list provides the JTF a sample of participating organizations.

AMERICAN COUNCIL FOR VOLUNTARY INTERNATIONAL ACTION

The American Council for Voluntary International Action (INTERACTION) is a broadly based coalition of 152 American PVOs that work in international development, refugee assistance, public policy, and education of Americans about third world nations. Since 1984, INTERACTION has also played a significant role in disaster preparedness and response to disasters. It exists to complement and enhance the effectiveness of its member organizations and the private and voluntary agency as a whole. A grant from OFDA has helped this organization establish a professional forum for cooperation, joint planning, and exchange of information when a disaster occurs. However, it is unlikely that INTERACTION will operate within the country in need of assistance. Its work is executed in the US and is organized to maintain an effective liaison with USAID/ OFDA. It acts as a coordinator at the staff level in meeting within the country in need.

AMERICAN FRIENDS OF ACTION INTERNATIONALE CONTRE LA FAIM

American Friends of Action Internationale Contre La Faim (AICF) promote development efforts and provide emergency assistance in Africa, Asia, and the Caribbean. AICF focuses on primary health care, potable water, environmental sanitation, and agricultural-based, income-generating projects. Its most basic commitment is to enhance local capacities at both community and central levels.

CATHOLIC RELIEF SERVICES

Catholic Relief Services (CRS) operates relief, welfare, and self-help programs in 74 countries to assist refugees, war victims, and other needy people. CRS emphasizes the distribution of food and clothing and the provision of primary health care. Its capability to provide technical assistance and social services has steadily increased in recent years.

COOPERATIVE FOR AMERICAN RELIEF EVERYWHERE, INCORPORATED

The Cooperative for American Relief Everywhere, Incorporated (CARE) conducts relief and development programs in over 40 countries in Asia, Africa, Latin America, and the Caribbean. Programs are carried out under three-way partnership contracts among CARE, private or national government agencies, and local communities in the areas of health, nutrition, AIDS education, population management, natural resources management,

agriculture, small economic activities, and emergency assistance. CARE provides technical assistance, training, food, other material resources, and management in combinations appropriate to local needs and priorities. Its particular strength is in food distribution, emergency transport, and general logistics.

DOCTORS WITHOUT BORDERS/ MEDICINS SANS FRONTIERS

Medicins Sans Frontiers (MSF) provides medical assistance to victims of disasters, accidents, and wars. The US organization is closely associated with its counterparts in Belgium, Holland, Spain, and France. Medical relief teams respond to more than 700 missions yearly to areas of conflict, refugee camps, national disaster sites, and areas lacking adequate health care facilities. Its particular area of expertise is emergency medicine, vaccinations, and basic hygiene services.

THE INTERNATIONAL MEDICAL CORPS

The International Medical Corps (IMC) provides health care and establishes health training programs in developing countries and distressed areas worldwide. IMC specializes in areas where few other relief organizations operate. IMC's goal is to promote self-sufficiency through health education and training. Its particular areas of expertise are immunizations and primary health care.

INTERNATIONAL RESCUE COMMITTEE

The International Rescue Committee (IRC) assists refugees and internally displaced victims of war and civil strife. Services range from emergency relief and assistance programs to refugee resettlement in the United States. IRC monitors human services, delivery, and refugee processing for US resettlement. IRC can provide emergency medical support, public health, and small-scale water and sanitation capabilities.

IRISH CONCERN

Irish Concern is one of the foreign NGOs that receives funding from USAID/OFDA. Its primary area of expertise is supplementary and therapeutic feeding and sanitation.

LUTHERAN WORLD RELIEF, INCORPORATED

Lutheran World Relief, Incorporated (LWR) provides financial, material, and personnel support, usually through counterpart church-related agencies in the areas of disaster relief, refugee assistance, and social and economic development. LWR is also a provider of health care.

SAVE THE CHILDREN FEDERATION/UNITED KINGDOM

Save the Children Federation/United Kingdom (SCF/UK) programs are guided by a set of principles, which include identifying project goals and implementing projects, transferring necessary skills, encouraging self-help, and using available resources. This organization is more relief oriented than its US counterpart. It concentrates on providing supplementary feeding, seeds and tools, and general infrastructure.

WORLD VISION RELIEF AND DEVELOPMENT, INCORPORATED

World Vision Relief and Development, Incorporated (WVRD or World Vision) provides cash, gifts in-kind, services in-kind, and technical resources for large-scale relief/ rehabilitation and development projects in over 90 countries throughout the world. Development programs include child survival, vitamin A distribution, prosthetics/handicap rehabilitation, child development, and AIDS prevention and education.

Appendix D

UNITED NATIONS ORGANIZATIONS FOR HUMANITARIAN ASSISTANCE

This appendix briefly describes the UN organizations that support humanitarian assistance.

UNITED NATIONS DEPARTMENT OF HUMANITARIAN AFFAIRS

UNDHA was established by the secretary-general early in 1992 with a mission to coordinate international HA efforts. UNDHA is intended to mobilize and coordinate international disaster relief, promote disaster mitigation (through the provision of advisory services and technical assistance), and promote awareness, information exchange, and the transfer of knowledge on disaster-related matters. UNDHA is responsible for maintaining contact with disaster management entities and emergency services worldwide and mobilizing specialized resources. The appointed UNDHA emergency coordinator has a crucial role in providing leadership to the UN team at the country level. UNDHA also coordinates with locally represented NGOs, PVOs, and IOs, as required. The emergency coordinator convenes the UN disaster management team (DMT) at country level, seeking unity of effort among all relief agencies.

UNITED NATIONS OPERATIONAL PROGRAMS AND ORGANIZATIONS

The following UN agencies can be expected in the area of operations. They help form the UNDMT when the UN system has been mobilized to assist in the emergency.

UNITED NATIONS DEVELOPMENT PROGRAM

A high probability exists that UNDP representatives will be in country prior to the crisis. UNDP promotes the incorporation of disaster mitigation in development planning and funds technical assistance for all aspects of disaster management. A UNDP senior member is the coordinator for UN agencies, much as an ambassador is the coordinator for all US agencies in a country during a humanitarian crisis. The UNDP also provides administrative assistance support to the UNDHA coordinator and to the UNDMT.

UNITED NATIONS HIGH COMMISSIONER FOR REFUGEES

Responsibility for coordinating the response of the UN system to a refugee emergency normally rests with the UNHCR. In certain cases, the secretary-general may make special arrangements. Upon request of the secretary-general, UNHCR provides assistance to internally displaced persons. Governments are responsible for the security and safety of, assistance to, and law and order among refugees on their territory. UNHCR provides material assistance to refugees at the request of governments.

WORLD FOOD PROGRAM

The World Food Program (WFP) is the operational relief-oriented UN organization. It provides general food rations, feeding programs, and supplemental feeding activities to support rehabilitation, reconstruction, and risk-reducing development programs. Targeted food aid is directed toward special segments of the population. WFP mobilizes and coordinates the delivery of food aid from bilateral and other sources.

UNITED NATIONS CHILDRENS' FUND

UNICEF is a relief-oriented organization. It attends to the well-being of children and pregnant and lactating mothers, especially child health, nutrition, and water. The activities of this organization may include social programs, child feeding (in collaboration with WFP), potable water, sanitation, and direct health intervention (in coordination with the World Health Organization [WHO]). UNICEF provides material assistance, related management, logistical support and technical assistance.

WORLD HEALTH ORGANIZATION

WHO is an organization involved more in long-range programs. It provides advice and assistance in all aspects of preventive and curative health care. This assistance includes the preparedness of health services for rapid response to disasters.

FOOD AND AGRICULTURE ORGANIZATION

The Food and Agriculture Organization (FAO) is an organization also involved in long-range programs. It provides technical advice in reducing vulnerability and helps in the rehabilitation of agriculture, livestock, and fisheries. The organization emphasizes local food production. It also monitors food production, exports, and imports and forecasts any requirements for exceptional food assistance.

Appendix E

SITUATION AND NEEDS ASSESSMENT

This appendix provides a list of considerations to be addressed by field units conducting HA.

PROCESS

The assessment process encompasses four activities: data collection, problem analysis, reporting, and follow-up activities. This process is divided into eight steps or modules. The steps are adapted from the Department of State, Bureau of Refugee Programs, Assessment Manual. More detail on individual steps can be found therein. Another useful assessment checklist is found in Appendix B, Army FM 41-10[1].

Step 1. Preliminary data collection (includes research prior to going to the field).

Step 2. Observations (made as the survey team approaches the scene of the emergency).

Step 3. On-site interviews (especially critical are observations of relief personnel).

Step 4. Visual inspection (verification of first impressions).

Step 5. Household survey (provides data to confirm, or reject, impressions gathered from interviews and visual inspections).

Step 6. Preparation for later surveillance (sets the stage for detailed monitoring in the future).

Step 7. Preliminary analysis (describes problems or systems to be analyzed and sets standards and procedures for analyzing the problem).

Step 8. Reports (consider all aspects of reporting requirements).

QUESTIONS

Assessment of HA requirements for a particular area must address a myriad of questions and problem areas. Some of these include—

- Where are the villagers originally from? What is the size of the original population of the village, including the surrounding countryside? What is the size of the refugee population? Why did they come here? What is the relationship of the village with the surrounding villages? Are they related? Do they support each other? Are they hostile toward one another? Is any portion of the village population discriminated against?
- What is the food and water status of the village? Where do they get their food? What other means of subsistence are available? Are the villagers farmers or herders? What is the quality of the water source?
- What is the health status of the village? What services are available in the village? What is the location of the nearest medical facility? Is there evidence of illness and/or starvation? What portion of the population is affected? What is the death rate? What diseases are reported in the village? Refer to FM 8-42 for an in-depth checklist, for a medical mission checklist, and a medical reconnaissance checklist.
- What clans exist in the village? Who are their leaders?
- What civil/military organizations exist in the village? Who are their leaders?
- What organization/leadership element does the general population seem to support or

1. *Civil Affairs Operations*. 11 January 1993.

trust the most? Which organization seems to have the most control in the village?

- What NGOs and PVOs operate in the village? Who are their representatives? What services do they provide? What portion of the population do they service? Do they have an outreach program for the surrounding countryside?
- What is the security situation in the village? What elements are the source of the problems? Who are the bandit leaders and where are they located? What is being done to curb these activities? What types and quantities of weapons are in the village? What are the locations of minefields?
- What commercial or business activities are present in the village? What services or products do they produce?
- Determine the groups in the village that are in the most need. What are their numbers? Where did they come from? How long have they been there? What are their specific needs?
- What civic employment projects would the village leaders like to see started?
- Determine the number of families in the village. What are their names? How many are in each family?
- What food items are available in the local market? What is the cost of these items? Are relief supplies being sold in the market? If so, what items are available, what is their source, and what is the price?
- What indigenous labor or services are available in the village?
- What is the size of any transient populations in the village? Where did they come from and how long have they been there?

Appendix F

DOD AND OFFICE OF FOREIGN DISASTER ASSISTANCE SUPPORT

This appendix describes JCS procedures for DOD support to foreign disaster relief. It is based on a joint staff memorandum dated 29 July 1987 and has been updated by the joint working group to reflect organizational changes within DOD. It includes—

- The interagency procedures by which DOD and its components assist in foreign disaster relief.
- DOD and interagency coordination, approval, funding, and billing procedures for foreign disaster relief.
- Internal DOD procedures for providing military support for foreign disaster relief.

POLICIES

DOD components support or participate in foreign disaster relief operations only after DOS determines that foreign disaster relief will be provided to the requesting country. However, military commanders at the immediate scene of a foreign disaster may undertake prompt relief operations to preserve lives and prevent injuries when time is of the essence and when humanitarian considerations make it advisable to do so. Commanders taking such action will immediately report such operations in accordance with the provisions of DOD Directive 5100.46.[1]

Approval authority for commitment of DOD component resources or services to foreign disaster relief operations rests with the Assistant Secretary of Defense for Democracy and Peacekeeping. The DOD coordinator for foreign disaster relief is the DASD HRA (Global Affairs). The joint staff point of contact for the DOD Foreign Disaster Relief/ Humanitarian Assistance Program is the Chief of the Logistics Directorate (J4).

GENERAL GUIDANCE

DOD supplies and services are provided for disaster and humanitarian purposes only after approval by Assistant Secretary of Defense for International Security Affairs (ASD [ISA]) on behalf of the Secretary of Defense. DOD provides supplies and services from the most expedient source, which is normally the unified command from whose theater the foreign disaster or humanitarian assistance request emanates.

The commander of a unified command, when directed, assumes the primary coordinating role for provision of DOD supplies and services. The military departments and joint staff support the designated commander of a unified command as required, principally by coordinating interdepartmental approval and funding processes as herein described through the DASD HRA (Global Affairs).

When a foreign disaster or humanitarian assistance request emanates from a country not assigned to a unified command under the Unified Command Plan, the joint staff/J4 assumes the primary coordinating role in conjunction with DASD HRA.

1. *Foreign Disaster Relief.* 4 December 1992.

PROCEDURES

Requests for DOD assistance come from DOS or USAID through OFDA. Upon receipt—

Step 1. OFDA routes the requests to ASD (ISA).

Step 2. When DOD approves the request, it then sends it to the joint staff/J4 for action.

Step 3. Upon receipt of the approved request, the joint staff/J4, if necessary, activates a 24-hour response team in the LRC and effects appropriate coordination among unified and specified commands, services, and defense agency staffs.

Step 4. The J4/LRC then determines the appropriate time to promulgate the requests for activation of comparable service or agency response cells.

Step 5. The LRC is augmented as necessary by USTRANSCOM and DLA liaison elements and coordinates with other joint staff directorates, as required.

The OFDA request will contain a list of items to be procured and provided by DOD. If items are unavailable in the unified command, or if the foreign disaster or humanitarian assistance request emanates from a country not assigned to a unified command, the J4/LRC will locate the requested items through DLA, a service, or a supporting CINC; calculate the cost, plus shipment, by the Defense Transportation System; and advise OFDA. Costs for disaster assistance are computed at the DOD rate.

Step 6. If OFDA accepts the costs, the J4/LRC requests DASD HRA approval for the commitment of DOD resources.

Step 7. If OSD approves the request as outlined above, the J4/LRC obtains funding and billing information and resource disposition instructions from OFDA; coordinates shipment; and notifies all concerned.

Step 8. The J4/LRC ensures that support of OFDA requests are rendered with highest priority.

Step 9. If deployment of military medical, communications, engineer, or transport units or personnel requires other than routine use of transportation port support personnel, the J4/LRC obtains per diem, operational, and transportation costs from the appropriate CINC or service. After obtaining OFDA funding and OSD approval, the joint staff director of operations publishes a CJCS deployment order.

REIMBURSEMENT

The J4/LRC receives fund cites from USAID/OFDA for each item and/or service required from DOD elements. The J4/LRC provides the fund cite to the service, agency supplier, USTRANSCOM, or transportation component commands for each action at the time the action is directed. USAID/OFDA only reimburses for those items and/or services it has requested.

Even though a CINC or on-scene military commander may act to preserve or save lives on his own initiative if urgency or timeliness requires, reimbursement of expended component service funds is not assured. CINCs and services will not be reimbursed if the President or the Secretary of Defense exercises drawdown authority. Each DOD element submits billings for reimbursement of costs incurred for supplies and/or services to DASD HRA in accordance with guidelines in DOD Directive 5100.46.

TASKING MESSAGE

Tasking messages from the J4/LRC will—

- Contain the USAID/OFDA fund cite and funding limit and advise the tasked element of the proper billing address and the joint staff point of contact.
- Require tasked units to provide clear text, itemized billing information, and the tasked unit point of contact.
- Advise tasked units that approval must be obtained before exceeding the funding limit and that all bills will be submitted in the next monthly billing cycle following completion of the activity.

Appendix G

DISASTER ASSISTANCE RESPONSE TEAM

This appendix describes a response capability called the disaster assistance response team, which OFDA has developed as a method of providing rapid response assistance to international disasters, as mandated by the *Foreign Assistance Act of 1961,* as amended. A DART provides specialists, trained in a variety of disaster relief skills, that assist US embassies and USAID missions in managing the US Government response to disasters.

ACTIVITIES

The activities of a DART vary, depending on the type, size, and complexity of disaster to which it deploys. During either type of disaster response, DARTs coordinate their activities with the affected country; PVOs, NGOs, and IOs; the UN; other assisting countries; and US military assets deployed to the disaster.

RAPID-ONSET DISASTERS

During rapid-onset disasters, the focus of a DART is to—

- Coordinate the assessment of needs.
- Recommend US Government response actions.
- Manage US Government on-site relief activities such as search and rescue and air operations.
- Manage the receipt, distribution, and monitoring of US Government-provided relief supplies.

LONG-TERM, COMPLEX DISASTERS

During long-term, complex disasters, the focus of a DART is to—

- Gather information on the general disaster situation.
- Monitor the effectiveness of current US Government-funded relief activities.
- Review proposals of relief activities for possible future funding.
- Recommend follow-on strategies and actions to OFDA Washington.

STRUCTURE

The structure of a DART is dependent on the size, complexity, type, and location of the disaster and the needs of the USAID/embassy and affected country. The number of individuals assigned to a DART is determined by how many people are required to perform the necessary activities to meet the strategy and objectives. A DART is composed of five functional areas: management, operations, planning, logistics, and administration.

MANAGEMENT

Management includes overall DART activities, including liaison with the affected country; PVOs, NGOs, and IOs; the UN; other assisting countries; and the US military. Additionally, it includes the development and implementation of plans to meet strategic objectives.

OPERATIONS

Operations include all operational activities carried out by the DART such as search and rescue activities, technical support to an affected country, medical and health response, and aerial operations coordination. This function is most active during rapid onset disasters.

PLANNING

Planning includes collection, evaluation, tracking, and dissemination of information about the disaster. Also included are reviews of activities, recommendations for future actions,

and development of the DART's operational (tactical) plan.

LOGISTICS

Logistics includes providing support to OFDA/DART personnel by managing supplies, equipment, and services and ordering, receiving, distributing, and tracking people and US Government-provided relief supplies.

ADMINISTRATION

Administration includes the management of fiscal activities of the team, contracts, and procurement of goods and services required by OFDA/DART. Also included are cost accounting of DART activities. A DART team leader selected by OFDA organizes and supervises the DART. The team leader receives a delegation of authority from and works directly for the OFDA assistant director for disaster response or his designee. The delegation lists the objectives, priorities, constraints, and reporting requirements for the DART. See Figure G-1. Based on this information, the team leader, in conjunction with the assistant directors for disaster response and operations support, identifies the other needed positions. The decisions on a DART's activation, composition, and mission are made at a disaster response planning meeting held in OFDA.

Prior to departure, the team leader attempts to contact the USAID/embassy (if present in the affected country) to discuss the situation; review the DART's structure, size, objectives, and capabilities; and identify the areas of support needed by the DART from USAID/embassy.

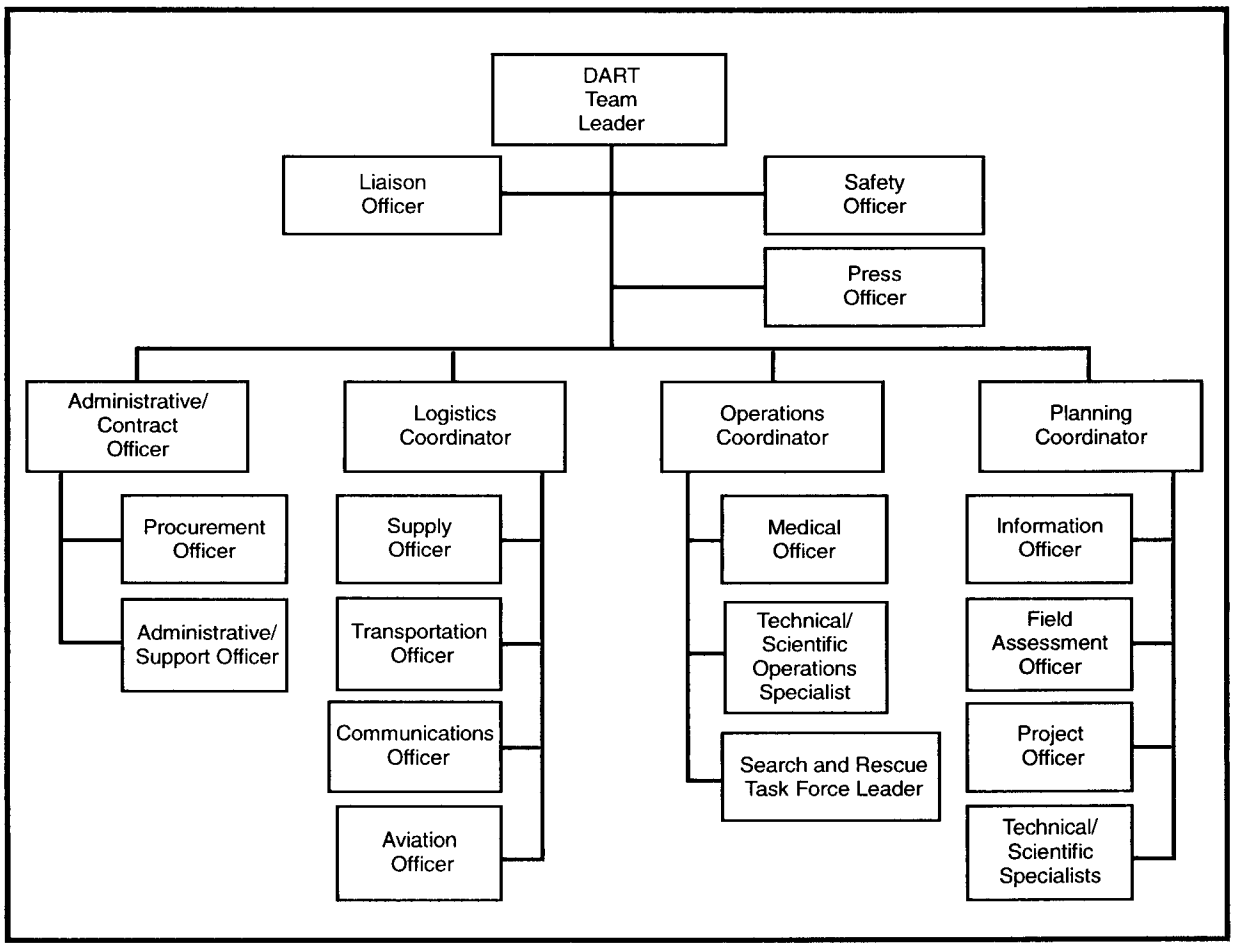

Figure G-1. DART Organization Chart

Upon arrival in an affected country, the team leader reports to the senior US official or to appropriate affected country officials, to discuss the DART's objectives and capabilities and to receive additional instructions and/or authority. While in the affected country, the team leader advises and may receive periodic instructions from the USAID/embassy. Those instructions are followed to the extent that they do not conflict with OFDA policies, authorities, and procedures. The team leader maintains a direct line of communications with OFDA Washington throughout the operation.

USAID/embassy and OFDA Washington determine the duration of a DART operation after reviewing the disaster situation and the progress in meeting its objectives.The DART is designed as a highly flexible and mobile organization capable of adjusting size and mission as may be required to satisfy changing disaster situation needs.

Appendix H

LIAISON OFFICERS' PROCEDURES AND CHECKS

This appendix describes general responsibilities of liaison officers (LNOs) before, during, and after a tour of duty with a JTF. It also applies to liaison personnel between adjacent units, supporting or assigned forces and CJTF, and CJTF and higher command. Procedures come from Joint Pub 5-00.2; therefore, NGOs, PVOs, and IOs may not be familiar with these standard procedures.

Operational success is always influenced by a commander's knowledge and use of his forces. As representatives of their parent command to CJTF, LNOs frequently provide the critical link to effectively coordinate and execute JTF operations. The responsibilities discussed herein provide guidance for the conduct of LNOs.

RESPONSIBILITIES BEFORE DEPARTURE

Before departure for the gaining headquarters, a LNO should—

- Be thoroughly briefed on the current situation of his unit and his commander's intent, including details of the concept of operations, for example, unit locations, factors such as personnel strength and logistics considerations, a map with overlays.
- Obtain specific information and/or liaison requirements from each staff section.
- Clearly understand his mission and responsibilities.
- Ensure that arrangements for communication and transportation meet mission requirements.
- Obtain necessary credentials for identification and appropriate security clearances.
- If conducting liaison with a coalition unit, check language and interpreter requirements.
- Become familiar with the potential issues, capabilities, employment doctrine, and operational procedures of his unit and, as much as possible, those of the unit to which he is being sent.
- Become familiar with command relationships among all major commands participating in the operation.

RESPONSIBILITIES ON ARRIVAL

On arrival at the headquarters to which sent, the LNO should—

- Report to the supported commander or section representative (J3 or chief of staff), state his mission and exhibit orders or credentials (if in writing), offer assistance, and be prepared to brief on his unit's situation.
- Visit each staff section, provide information as required, and obtain all information required to be transmitted to his unit.
- Establish communication with his unit and exchange updated information as required

RESPONSIBILITIES DURING THE TOUR

During the liaison tour, the LNO should—

- Keep informed of the situation of his own unit and make that information available to the commander and staff of the unit to which he is sent.
- Find out how his parent command will be employed, for example, mission, unit location, future locations, future operations, commander's intent.

- Accomplish the mission without interfering with the operations of the headquarters to which he is sent.
- Report promptly to his own headquarters if he is unable to accomplish the liaison mission.
- Report to his parent command on those matters within the scope of the LNO mission.
- As permitted by official order, inform the visited unit commander of the contents of reports dispatched to the LNO's parent headquarters.
- Inform the appropriate supported staff officer or commander about significant problems being experienced by the LNO's parent unit that could affect operations of other commands and vice versa and LNO suggestions to enhance the effective employment for maximizing the effectiveness of the LNO's parent command.
- Ensure that the LNO's location at the headquarters is known at all times, for example, inform the tactical operations center (TOC) duty officer of daily activities.
- Advise his parent unit, if possible, of departure from the liaison location.
- Attend CJTF's daily situation update briefing and other meetings as required.
- Keep an appropriate record of his actions and reports.
- Report to the visited unit commander prior to departing at the completion of his mission.

RESPONSIBILITIES UPON RETURN

Upon return to his own headquarters, the LNO should—

- Brief the commander or section representative on all pertinent information received during the his visit, for example, detailed information concerning the mission of the higher headquarters, unit locations, future locations, and commander's intent.
- Transmit promptly any request of the visited commander.
- Transmit mission requirements and requests for information from the visited headquarters.
- Transmit information required by higher headquarters in each staff area of responsibility.
- Keep abreast of the situation and be prepared to respond to future liaison requirements.

Appendix I

INSIGNIA OF THE UNITED STATES ARMED FORCES

This appendix provides a pictorial view of the rank structure and insignia of the US armed forces for both officers and enlisted members. This appendix is included to aid NGOs, PVOs, and other nonmilitary personnel that work with US military forces in HA operations.

	E-1	E-2	E-3	E-4	E-5	E-6	E-7	E-8	E-9	
NAVY	SEAMAN RECRUIT	SEAMAN APPRENTICE	SEAMAN	PETTY OFFICER THIRD CLASS	PETTY OFFICER SECOND CLASS	PETTY OFFICER FIRST CLASS	CHIEF PETTY OFFICER	SENIOR CHIEF PETTY OFFICER	MASTER CHIEF PETTY OFFICER	MASTER CHIEF PETTY OFFICER OF THE NAVY
MARINES	(no insignia) PRIVATE	PRIVATE FIRST CLASS	LANCE CORPORAL	CORPORAL	SERGEANT	STAFF SERGEANT	GUNNERY SERGEANT	FIRST SERGEANT MASTER SERGEANT	SERGEANT MAJOR MASTER GUNNERY SERGEANT	SERGEANT MAJOR OF THE MARINE CORPS
ARMY	(no insignia) PRIVATE	PRIVATE	PRIVATE FIRST CLASS	CORPORAL SPECIALIST 4	SERGEANT	STAFF SERGEANT	SERGEANT FIRST CLASS	FIRST SERGEANT MASTER SERGEANT	COMMAND SERGEANT MAJOR SERGEANT MAJOR	SERGEANT MAJOR OF THE ARMY
AIR FORCE	(no insignia) AIRMAN BASIC	AIRMAN	AIRMAN FIRST CLASS	SERGEANT SENIOR AIRMAN	STAFF SERGEANT	TECHNICAL SERGEANT	MASTER SERGEANT	SENIOR MASTER SERGEANT	CHIEF MASTER SERGEANT	CHIEF MASTER SERGEANT OF THE AIR FORCE

O-1	O-2	O-3	O-4	O-5	O-6	O-7	O-8	O-9	0-10	SPECIAL
NAVY										
ENSIGN	LIEUTENANT JUNIOR GRADE	LIEUTENANT	LIEUTENANT COMMANDER	COMMANDER	CAPTAIN	REAR ADMIRAL (Lower Half)	REAR ADMIRAL (Upper Half)	VICE ADMIRAL	ADMIRAL	FLEET ADMIRAL
MARINES										
SECOND LIEUTENANT	FIRST LIEUTENANT	CAPTAIN	MAJOR	LIEUTENANT COLONEL	COLONEL	BRIGADIER GENERAL	MAJOR GENERAL	LIEUTENANT GENERAL	GENERAL	
ARMY										
SECOND LIEUTENANT	FIRST LIEUTENANT	CAPTAIN	MAJOR	LIEUTENANT COLONEL	COLONEL	BRIGADIER GENERAL	MAJOR GENERAL	LIEUTENANT GENERAL	GENERAL	GENERAL OF THE ARMY
AIR FORCE										
SECOND LIEUTENANT	FIRST LIEUTENANT	CAPTAIN	MAJOR	LIEUTENANT COLONEL	COLONEL	BRIGADIER GENERAL	MAJOR GENERAL	LIEUTENANT GENERAL	GENERAL	GENERAL OF THE AIR FORCE

WARRANT				COAST GUARD
NAVY	MARINES	ARMY	AIR FORCE	
WARRANT OFFICER W-1	WARRANT OFFICER (W-1)	WARRANT OFFICER (W-1)	WARRANT OFFICER (W-1)	Coast Guard officers use the same rank insignia as Navy officers. Coast Guard enlisted rating badges are the same as the Navy's for grades E-1 through E-9, have silver specialty marks, eagles and stars, and gold chevrons. The badge of the Master Chief Petty Officer of the Coast Guard has a gold chevron and specialty mark, a silver eagle and gold stars. For all ranks, the gold Coast Guard shield on the uniform sleeve replaces the Navy star.
CHIEF WARRANT OFFICER W-2	CHIEF WARRANT OFFICER (W-2)	CHIEF WARRANT OFFICER (W-2)	CHIEF WARRANT OFFICER (W-2)	
CHIEF WARRANT OFFICER W-3	CHIEF WARRANT OFFICER (W-3)	CHIEF WARRANT OFFICER (W-3)	CHIEF WARRANT OFFICER (W-3)	
CHIEF WARRANT OFFICER W-4	CHIEF WARRANT OFFICER (W-4)	CHIEF WARRANT OFFICER (W-4)	CHIEF WARRANT OFFICER (W-4)	
		CHIEF WARRANT OFFICER (W-5)		

Appendix J

Lessons Learned from Recent HA Operations

This appendix is a compilation of lessons learned from four recent HA operations: Operation Provide Comfort in northern Iraq, Provide Relief, the Mombasa Airlift for relief supplies to Somalia, Operation Restore Hope in Somalia, and the UN HA operation in Bosnia. This material was provided by OFDA and represents an overview of specific problem areas encountered in each case. Military commands should understand that this appendix is presented from the perspective of civilian agencies working with military forces.

PROVIDE COMFORT - NORTHERN IRAQ (APRIL 1991 - PRESENT)

Objectives	Problems	Problems Addressed by	Planning Process	Constraints
INITIAL				
1. Save lives (reduce death rates)	1.a. 400,000 Kurdish refugees fled to Turkish border; 800,000 refugees went to northern Iran 1.b. Turkish Govt refused entry, forcing refugees to survive in mountains		1.a. Deputies Committee	1.a. Iraqi Govt hostility to the Kurds • Isolated area • Weakness of the UN • Returning home or permanent camps were not acceptable options
2. Provide post-war relief		2.a. Coalition forces began airdrops of excess Desert Storm supplies from Incirlik AFB	2.a. USAID formed posthostility contingency planning during war	
3. Complete US intervention and withdrawal		3.a. Deployment of US military civil affairs, US embassy liaison teams, and OFDA DART		

PROVIDE COMFORT - NORTHERN IRAQ (APRIL 1991 - PRESENT)

Objectives	Problems	Problems Addressed by	Planning Process	Constraints
SUBSEQUENT (2 weeks)				
1. Establish secure zone in northern Iraq so that refugees would feel safe to return	1.a. Presence, threats, and harassment by Iraqi military, police, and secret police	1.a. Deployment of coalition military to establish secure zone, set up camps 1.b. Establish no-fly zone above 36th Parallel	1.a. Deputies Committee 1.b. EUCOM transition planning	1.a. Initial secure zone did not include Dahuk, origin of most refugees 1.b. Pace of UN mobilization 1.c. PVO mandate in secure zone needed expansion
2. Set up camps in secure zone		2.a. DART initiated grants to PVOs to manage camps and transit to UN	2.a. DART/JTF camp construction design	
3. Begin repatriation of Kurds to secure zone	3.a. Reluctance of Kurds to return to northern Iraq 3.b. Kurds fearful of loss of protection			
SUBSEQUENT (2 months)				
1. Withdrawal of coalition military forces	1.a. MOU with GOI permitted Iraqi interference 1.b. Continued GOI harassment	1.a. Retained no-fly zone and "over-the-horizon" protection 1.b. Coalition members developed cross-border, bilateral relief programs	1.a. EUCOM relief and transition planning 1.b. DART transition planning	1.a. PVO protection required
2. UN management of relief operations		2.a. UN negotiation with GOI under terms of MOU	2.a. UN transition planning	2.a. UN facilitation of PVO relief efforts
3. Prepare long-term relief through winter and beyond	3.a. Wheat harvest sold outside area 3.b. No effective economic management			3.a. Sanctions prevent development of self-sufficiency

PROVIDE COMFORT - NORTHERN IRAQ (APRIL 1991 - PRESENT)

Objectives	Problems	Problems Addressed by	Planning Process	Constraints
SUBSEQUENT (6 months and on)				
1. UN relief efforts maintained	1.a. Reconstruction limited by sanction restrictions	1.a. Effort in UNSC to reduce sanction constraints	1.a. UN/DHA	1.a. Sanctions limitations
2. Coalition relief efforts maintained	2.a. GOI embargo prohibiting trade between north and south Iraq	2.a. Local purchase program for wheat established, managed by WFP	2.a. IWG (DOS/ NEA led)	2.a. Continued GOI noncooperation
	2.b. Turkey prohibits fuel commerce cross-border, reducing most normal commerce	2.b. Turkey engaged as participant in relief efforts		
3. Reduce relief requirements over time			3.a. DOD/ USAID (OFDA, OSD, JCS, EUCOM, CTF/ DART)	
4. Resettle refugees to self-sufficient locations	4.a. Conflict also halts cross-border trucking, further isolating Kurds			4.a. Limited protection of PVOs 4.b. Isolation of Kurds
5. Expand sanctions to permit infrastructure rehabilitation	5.a. Kurds not organized to manage economy effectively	5.a. Funded road repair program to transport relief goods to south Kurd areas		
6. Develop agricultural self-sufficiency				
7. Develop internal wheat purchase program	7.a. GOI currency manipulations	7.a. Use of Turkish lira in Kurd areas found acceptable 7.b. Stockpiling of relief commodities		

MOMBASA AIRLIFT - SOMALIA (DECEMBER 1992 – MAY 1993)

Objectives	Problems	Problems Addressed by	Planning Process	Constraints
A. Airlift food and emergency relief supplies to Somalia/northern Kenya	1. Confusion of OFDA/DART and US military roles	1.a. Assignment of liaison officers 1.b. Coordination on policy and operations between OFDA/DART and military commanders 1.c. Regular communication between DART and military commanders 1.d. Extending TDY time for DART personnel to ensure continuity	1.a. Create an "emergency action group" with the authority to convene an IWG of agencies to– • Make planning recommendations • Delineate and assign agency responsibilities • Identify the lead agency 1.b. Develop SOPs and interagency agreements to formalize the planning process	1.a. Lack of a formal mechanism/procedures for joint planning
	2. US military did not understand UN, NGO, ICRC mandates	2.a. OFDA/DART served as intermediary 2.b. OFDA/DART briefings	2.a. USAID should assist with training of military personnel. Recommend military include HA in senior officer training programs 2.b. Recommend NGO input into training and mission simulations	2.a. Military lacks formal training on civilian resources and organizational mandates
	3. Military did not understand the food distribution system	3.a. OFDA/DART validated food requests and requirements and coordinated delivery by the military to UN agencies, NGOs, ICRC	3.a. USAID should have lead responsibilities in a military-supported food distribution program	

MOMBASA AIRLIFT - SOMALIA (DECEMBER 1992 – MAY 1993)

Objectives	Problems	Problems Addressed by	Planning Process	Constraints
A. Airlift food and emergency relief supplies to Somalia/northern Kenya (continued)	4. Classified material	4.a. OFDA/ DART security clearances provided to JTF 4.b. Using military liaison officers and embassy/consulate resources to transmit/receive classified materials	4.a. Address security clearance procedures in interagency/ SOPs	4.a. Classified material requiring different levels of security clearances
	5. Personal security of civilians (e.g., travel on military aircraft)	5.a. Command and policy clarifications 5.b. DART validated travel	5.a. Address in initial planning process and refine in contingency planning	5.a. Military/ legal procedural requirements
	6. Incompatibility in communication equipment	6.a. Standardizing on possible radio frequencies and establishing HF radio communication times	6.a. Disseminate radio frequency information	6.a. Radios that can be programmed
	7. Lack of clarity of overall roles	7.a. Establishing working relationships between military and OFDA/DART	7.a. Fully integrate planning process involving key agencies	7.a. Insufficient planning

RESTORE HOPE - SOMALIA (DECEMBER 1992 – MAY 1993)

Objectives	Problems	Problems Addressed by	Planning Process	Constraints
To ensure the delivery of humanitarian assistance under UN resolution	1. Confusion over military and OFDA/DART roles	1.a. Assignment of a DART to Mogadishu 1.b. Establishment of the civil-military operations center 1.c. Appointment of Ambassador in Somalia to coordinate the HA/military/political strategies 1.d. Working experience gained by military commanders who had earlier worked in the Mombasa airlift 1.e. Assignment of liaison officers	1. USAID should be an integral part of the military/political planning process	1.a. Lack of familiarity by the military on the functions/ responsibilities of OFDA and DART 1.b. Restrictions or reluctance on the part of senior military commanders to use nonmilitary resources
	2. Military priorities were determined without participation of humanitarian relief organizations	2.a. OFDA/ DART became intermediary for input by relief organizations 2.b. Civil-military operations center provided a forum for NGOs	2. USAID should be designated to represent the humanitarian relief community in key USG/UN agencies	2.a. Assumption that HA can be planned and executed as a traditional political-military intervention
	3. Lack of information before intervention created security risk for relief workers	3.a. Not addressed	3.a. USAID representation in all phases of military/civilian planning 3.b. Use of OFDA as a communication avenue to NGO consortium	3.a. Lack of knowledge on NGO operations and locations

RESTORE HOPE - SOMALIA (DECEMBER 1992 – MAY 1993)

Objectives	Problems	Problems Addressed by	Planning Process	Constraints
To ensure the delivery of humanitarian assistance under UN resolution (continued)			3.c. Establish as SOP a civil-military operations center prior to intervention 3.d. Use UN communication networks	
	4. Uncoordinated assessments	4.a. Civil-military operations center	4.a. Coordination by lead agency	4.a. Tendency of different NGOs and organizations to do assessments without sharing information
	5. Lack of military briefings for civilians	5.a. Addressed by DART scheduling regular meetings and including military representatives 5.b. Civil-military operations center held daily briefings in Mogadishu 5.c. DART established regional networks in Somalia 5.d. OFDA issued situation reports and USAID handled press and media inquiries	5.a. Schedule regular briefings as an SOP	5.a. Need for a forum and coordination
	6. US military presence raised local expectations of what might be achieved	6.a. DART and military commanders established communications with regional leaders	6.a. Communicate to NGOs and indigenous leadership the scope of activities planned	6.a. Define objectives and the need for inclusion of local leaders

RESTORE HOPE - SOMALIA (DECEMBER 1992 – MAY 1993)

Objectives	Problems	Problems Addressed by	Planning Process	Constraints
To ensure the delivery of humanitarian assistance under UN resolution (continued)	7. Impact of intervention on local economy was not fully analyzed	7.a. USAID provided economic and currency analysis 7.b. Payment in local currency 7.c. Use of food for work programs 7.d. Donor consensus on program interventions		7.a. No banking system 7.b. No UN policies established
	8. Security problem was "pushed" from Mogadishu to other areas	8.a. Coordination in multinational troop deployment strategy	8.a. Contingency planning	8.a. UN mandate
	9. Different agendas for NGOs, UN, and military commanders	9.a. Coordination by US ambassador 9.b. Civil-military operations center attempted to create consensus	9.a. Appoint lead agency 9.b. Create training programs for US military 9.c. Second US personnel to UN agencies	9.a. Different mandates and operational perspectives
	10. Lack of NGO/ UN field staff	10.a. Not adequately addressed	10.a. Contingency planning	10.a. Security conditions 10.b. Lack of UN personnel system responsive to emergency operations
	11. Civilians lacked an understanding of military ranks and units	11.a. DART/ CMOC briefings	11.a. Training for NGOs	11.a. Lack of familiarity and working relationships
	12. Frequent military and civilian rotations	12.a. Assignment of DART personnel for long-term TDYs	12.a. Planning with assignment of personnel for 3-month rotations	

UN HUMANITARIAN OPERATION - BOSNIA (JUNE 1992 - PRESENT)

Objectives	Problems	Problems Addressed by	Planning Process	Constraints
A. Deliver food and relief supplies to Muslim enclaves to stem population movements (reinforce Vance-Owen plan) spring 1992 until spring 1993	1. Serbian Govt obstruction of UNHCR convoys from Belgrade	1.a. UNHCR tries to reach agreements with Belgrade on access. 1.b. UN imposes stiffer sanctions on Serbia to get cooperation on access	1.a. Creation of UN Sanctions Committee to monitor impact and enforcement of sanctions on Serbia	1.a. Serbia tightens resolve against UN sanctions, elects hard-line government
	2. Bosnian Serb military attacks on Muslim areas and ethnic cleansing of captured areas	2.a. UNPROFOR peacekeeping forces deployed to escort UNHCR convoys 2.b. UN designates "safe havens" and pronounces "no-fly zone"	2.a. Coordinated UNHCR Logistics Operation out of Geneva, Rhein-Main, Zagreb, Metkovic, Belgrade, Ancona 2.b. Designation of General Morillion as UNPROFOR commander 2.c. UN decrees "by any means necessary" policy and "no-fly zone"	2.a. Coordination complicated by uncertain command structure, separated management points (Geneva, Belgrade, Zagreb, Washington) 2.b. Unclear authorities, mandate, and objectives given to UNPROFOR 2.c. Rules of Engagement not given or followed by UNPROFOR
	3. Bosnian Serbs deny access of UNHCR convoys to Muslim areas	3.a. UNHCR negotiates with Bosnian Serb militia to permit diversions (23%) of relief cargo, inspections of convoys, harassment of drivers, etc. 3.b. UNHCR commences airlifts into Sarajevo once road deliveries are disrupted (June 1992)	3. OFDA consultants (Brennan, Stuebner, Maynard, Libby) conduct assessments in former Yugoslavia	

UN HUMANITARIAN OPERATION - BOSNIA (JUNE 1992 - PRESENT)

Objectives	Problems	Problems Addressed by	Planning Process	Constraints
B. Prevent mass death from starvation, exposure, disease, during winter 1992-93	1. Winter obstructs access (blocked roads, blizzards)	1. OFDA dispatches Bailey bridge experts to plan, design, oversee construction of Bailey bridges near Mostar	1. DOS Hamilton Working Group formed; interagency teleconferences started	1. Transition in US administration led to unclear US-Bosnia policy
	2. Food, heating fuel, supply shortages throughout Bosnia	2. OFDA provides stoves, fuel, and plastic sheeting to UNHCR. Grants to UNHCR, IRC, and UNICEF for winterization programs	2. OFDA dispatches DART to Zagreb to coordinate USG relief assistance (Dec 92)	2. European allies back Vance-Owen plan and limited UNPROFOR mandate
C. Provide assistance to remaining Muslim enclaves in eastern Bosnia, Muslims displaced in Tuzla, and Muslim pockets in south/central Bosnia (spring 1993)	1. Bosnian Serbian capture of Cerska, Zepa, and Srebrenica; mass exodus to Tuzla	1.a. Following fall of eastern Bosnian Muslim enclaves, regular UNHCR convoys to Tuzla and other safe havens were permitted through Serb–controlled areas 1.b. OFDA-funded NGO programs (IRC, Solidarities, AICF, IMC, CRS, etc) address needs to Bosnian population 1.c. US begins airdrops of MREs and medical supplies on eastern enclaves in March; Germany and France join airdrops	1. Hamilton Interagency Humanitarian Assessment Teams conduct (DOS, OFDA, USAID, DOD, CDC) assessments throughout Bosnia (Feb-Mar 1993); produce survey report 19 Apr 93	1. Mixed signals on US administration policy toward Bosnia

UN HUMANITARIAN OPERATION - BOSNIA (JUNE 1992 - PRESENT)

Objectives	Problems	Problems Addressed by	Planning Process	Constraints
C. Provide assistance to remaining Muslim enclaves in eastern Bosnia, Muslims displaced in Tuzla, and Muslim pockets in south/central Bosnia (spring 1993) (continued)	2.a. Breakout of fighting between Bosnian Croat forces (HVO) and Bosnian Muslim forces in south Bosnia 2.b. HVO obstruction of convoys from Metkovic to south/central Bosnia	2.a. Pressure applied to Croatian Govt and HVO to permit access	2. DART increases assessments of south/central Bosnia; DART field rep stationed in Split	2. Vance-Owen plan discarded. Bosnian Serb and Croat forces intensify land-grabbing attacks on Muslim territory in anticipation of partition of Bosnia along ethnic lines
D. Restore food deliveries, water, power supply to Sarajevo; reduce malnutrition and threat of typhoid and hepatitis (summer 1993)	1. Bosnian Serb forces cut off electricity, water to Muslim areas; Bosnian Serbs capture Mount Igman, increase artillery and sniper fire on civilians; food and supplies difficult to transport inside city	1. UNHCR airlifts to Sarajevo increase; international pressure put on Serbs; threat of NATO airstrikes causes Serbs to relieve stranglehold on Sarajevo and redeploy off Mount Igman	1. DART increases assessments in Sarajevo. Writes cable on "Fall of Sarajevo" in early July	1. Convoys to Sarajevo from Metkovic obstructed by HVO
	2. Emergency medical cases receive international attention	2. Internationally sponsored MEDEVACS increase out of Sarajevo	2. DART procures water purification tablets for Sarajevo; CDC starts assessments in south/central Bosnia	2. Fighting in south Bosnia intensifies; Muslim section of Mostar cut off

GLOSSARY

ACCP	Air Combat Command pamphlet
admin	administration
AFFOR	air force forces (a component of a joint force)
AFMIC	Armed Forces Medical Intelligence Center
AICF	American Friends of Action Internationale Contre La Faim
ALSA	Air Land Sea Application Center
amphib	amphibious
AO	area of operations
AOR	area of responsibility
AOS	Alaska Oil Spill
APIC	Allied Press Information Center
ARC	American Red Cross
ARFOR	Army Forces (a component of a joint force)
ARG	amphibious ready group
ASD	Assistant Secretary of Defense
ASD(ISA)	Assistant Secretary of Defense for International Security Affairs
bde	brigade
bn	battalion
C^2	command and control
C^3	command, control, and communications
CA	civil affairs
CALL	Center for Army Lessons Learned
CARE	Cooperative for American Relief Everywhere, Inc.
CAT	crisis action team
cdr	commander
CFR	*Code of Federal Regulations*
CFST	coalition forces support team
CIB	Combined Information Bureau
CINC	commander in chief
CINCCENT	commander in chief, US Central Command
CINCEUR	commander in chief, Europe
CINCPAC	commander in chief of the Pacific Command
CINCTRANS	commander in chief, Transportation Command

CJCS	Chairman of the Joint Chiefs of Staff
CJTF	commander of the joint task force
CMOC	civil-military operations center
comdt	commandant
COMFOR	commander, Forces Command
comm	communications
CONUSA	continental United States Army
CPS	cayenne pepper spray
CRS	Catholic Relief Services
CS	combat support
CSS	combat service support
CST	coalition support team
CTF	combined task force
CTS	commodity tracking systems
DALIS	Disaster Assistance Logistics Information System
DART	disaster assistance response team
DAS	Deputy Assistant Secretary
DASD	Deputy Assistant Secretary of Defense
DCE	defense coordination element
DCO	defense coordinating officer
DHA	Department of Humanitarian Affairs
DHHS	Department of Health and Human Services
DHUD	Department Housing and Urban Development
DJS	director, joint staff
DJTFAC	deployable joint task force augmentation cell
DMT	disaster management team
DOC	Department of Commerce
DOD	Department of Defense
DOE	Department of Energy
DOEd	Department of Education
DOI	Department of Interior
DOJ	Department of Justice
DOL	Department of Labor
DOMS	director of military support
DOS	Department of State
DOT	Department of Transportation
DUSD	Deputy Under Secretary of Defense

EOC	emergency operations center
EPA	Environmental Protection Agency
ESF	emergency support functions
FAO	Food and Agriculture Organization
FAST	fleet antiterrorist support team
fax	facsimile
FCC	Federal Communications Commission
FCO	federal coordinating officer
FDC	Bureau for Food, Disaster Assistance and Crisis Management
FEMA	Federal Emergency Management Agency
FM	field manual
FMFRP	fleet marine force reference publication
FRP	Federal Response Plan
FSSG	force service support group
FYRM	Former Yugoslavia Republic of Macedonia
GP	general purpose
GSA	General Services Administration
HA	humanitarian assistance
HACC	humanitarian assistance coordination center
HAST	humanitarian assistance survey team
HCA	humanitarian and civic assistance
HCR	high commissioner for refugees
HHS	Health and Human Services Department
HN	host nation
HOC	humanitarian operation center
HQ	headquarters
HRA	Humanitarian and Refugee Affairs
HRS	humanitarian relief sectors
HSS	health service support
ICC	Interstate Commerce Commission
ICRC	International Committee of the Red Cross
IFRC	International Federation of Red Cross and Red Crescent Societies
IMC	International Medical Corps
INTERACTION	American Council for Voluntary International Action
IO	international organization
IOM	International Organization for Migration

IPB	intelligence-preparation-of-the-battlefield
IRC	International Rescue Committee
IWG	interagency working group
J1	personnel
J2	intelligence
J3	operations
J4	logistics
J5	plans and policy
J6	communications
J7	operations, plans, and interoperability
J8	force structure resource and assessment
JCS	Joint Chiefs of Staff
JFC	joint force commander
JFL	joint forward laboratory
JFUB	joint facilities utilization board
JIB	joint information bureau
JLOC	joint logistics operations center
JMC	joint movements center
JOC	joint operations center
JOPES	Joint Operation Planning and Execution System
JPOTF	joint psychological operations task force
JS	joint staff
JSOTF	joint special operations task force
JTF	joint task force
JTF PP	Joint Task Force Provide Promise
JTFSC	joint task force support command
JULLS	Joint Universal Lessons Learned System
LF	landing force
LNO	liaison officers
LOA	lead operational authority
LOC	logistics operations center
log	logistics
LRC	logistics readiness center
LWR	Lutheran World Relief, Incorporated
MAGTF	Marine air-ground task force
MARFOR	marine forces (service component of a joint force)
MASH	mobile army surgical hospital

MCC	movement control center
MCDA	military and civil defense assets
med	medium
MEB	Marine expeditionary brigade
MEF	Marine expeditionary force
METL	mission-essential task list
METOC	meteorology and oceanography
MEU	Marine expeditionary unit
MOE	measures of effectiveness
MOOTW	military operations other than war
MRE	meals ready-to-eat
MRO	medical regulating office
MSCA	military support to civil authorities
MSF	Medicins Sans Frontiers
MSR	main supply route
MTF	multinational task force
NASA	National Aeronautics and Space Administration
NAVFOR	naval forces (service component of a joint force)
NBC	nuclear, biological, chemical
NCA	National Command Authorities
NCO	noncommissioned officer
NCS	National Communications System
NDC	Naval Doctrine Command
NEO	noncombatant evacuation operations
NGO	nongovernment organizations
NRC	Nuclear Regulatory Commission
NSC	National Security Council
OES	office of emergency services
OFDA	Office of Foreign Disaster Assistance
off	officer
OPM	Office of Personnel Management
OPORD	operations order
OPR	offices of primary responsibility
OSD	Office of the Secretary of Defense
PACAFP	Pacific Air Forces pamphlet
PAHO	Pan American Health Organization
PE	peace enforcement

PK	peacekeeping
PKO	peacekeeping operations
PSYOP	psychological operations
PVO	private voluntary organization
ROE	rules of engagement
RCA	riot control agents
rep	representative
SC	special coordinator
SCF	Save the Children Federation
SCO	state coordinating officer
Seabees	Navy construction battalions
SECARMY	Secretary of the Army
SECDEF	Secretary of Defense
sec pol	security police
SF ODA	Special Forces operational detachments-A
SJA	staff judge advocate
SOC	special-operations-capable
SOFOR	special operations forces (a component of a JTF)
SOF	special operations forces
SOP	standing operating procedure
STARC	state area command
TACNOTE	tactical note
TAG	The Adjutant General
TF	task force
TOC	tactical operations center
TPFDD	time-phased force deployment data
TTP	tactics, techniques, and procedures
TVA	Tennessee Valley Authority
UK	United Kingdom
UN	United Nations
UNDHA	United Nations Department of Humanitarian Affairs
UNDP	United Nations Development Program
UNHCR	United Nations High Commissioner for Refugees
UNICEF	United Nations Children's Fund
UNITAF	unified task force
UNWFP	United Nations World Food Program
US	United States

USAFEP	United States Air Forces Europe pamphlet
USAID	United States Agency for International Development
USCENTCOM	United States Central Command
USCINCCENT	commander-in-chief, United States Central Command
USCG	United States Coast Guard
USDA	United States Department of Agriculture
USACE	United States Army Corps of Engineers
USACOM	United States Atlantic Command
USAID	United States Agency for International Development
USAR	United States Army Reserve
USD	Under Secretary of Defense
USIS	United States Information Service
USMC	United States Marine Corps
USPACOM	United States Pacific Command
USPS	United States Postal Service
USSOCOM	US Special Operations Command
USTRANSCOM	United States Transportation Command
VA	Veterans Administration
VDJS	vice-director, joint staff
WFP	World Food Program
WHO	World Health Organization
WIN	Worldwide Military Command and Control System intercomputer network
WWMCCS	Worldwide Military Command and Control System
WVRD	World Vision Relief and Development, Incorporated

REFERENCES

STATUTES

18 USC § 1385. *The Posse Comitatus Act.*

22 USC § 2151. *Foreign Assistance Act of 1961,* as amended.

32 USC § 502, 3500. Mobilization Statutes (Army and Air National Guard).

42 USC, § 5121, et seq, as amended. *The Robert T. Stafford Disaster Relief Act.*

FEDERAL PUBLICATIONS

Assessment Manual. Department of State, Bureau of Refugee Programs. undated.

DALIS - Disaster Assistance Logistics Information System Program and Users Handbook. OFDA, Washington, DC. 1993.

Federal Response Plan. April 1992.

Guide to Field Operations for Disaster Response. Office of Foreign Disaster Assistance, Bureau for Food and Humanitarian Assistance, Agency for International Development, Version 1.0. Undated.

National Security Strategy. 1994.

1994 Report of American Voluntary Agencies Engaged in Overseas Relief and Development with the Agency for International Development (Voluntary Foreign Aid Programs). Bureau for Food and Humanitarian Assistance, Agency for International Development, Washington, DC.

Voluntary Foreign Aid Programs. US Agency for International Development. 1994.

JOINT AND MULTISERVICE PUBLICATIONS

CINCUSACOM Functional Plan 2500-96. *Foreign Disaster Relief.* Draft.

DOD Directive 3025.1. *Military Support to Civil Authority.* January 1993.

DOD Directive 5100.46. *Foreign Disaster Relief.* 4 December 1992.

(S) *Emergency Foreign Humanitarian Assistance* (U). USCINCCENT. January 1992.

Joint Pub 1-02. *DOD Dictionary of Military and Associated Terms.* 8 September 1993.

Joint Pub 3-0. *Doctrine for Joint Operations.* 9 September 1993.

Joint Pub 3-07. *Joint Doctrine for Military Operations Other Than War* (Draft Final Pub). April 1993.

Joint Pub 3-07.3. *Joint Tactics, Techniques, and Procedures for Peacekeeping Operations.* June 1993.

Joint Pub 3-08. *Interagency Coordination During Joint Operations* (Draft). December 1994.

Joint Pub 3-16. *Joint Doctrine for Multinational Operations* (Draft). October 1994.

Joint Pub 3-53. *Doctrine for Joint Psychological Operations*. 30 July 1993.

Joint Pub 3-57. *Doctrine for Joint Civil Affairs*. November 1993.

Joint Pub 4-01.1. *Airlift Support to Joint Operations*. October 1991.

Joint Pub 5-0. *Doctrine for Planning Joint Operations*. Undated.

Joint Pub 5.00.2. *Joint Task Force Planning Guidance and Procedures*. September 1991.

Joint Pub 5.03.1. *Joint Operations Planning and Execution System*. 4 August 1991.

Joint Task Force Commanders' Handbook for Peace Operations. Joint Warfighting Center, 28 February 1995.

Strawman TTP for Peace Enforcement, Peacemaking, Peacekeeping, Humanitarian Assistance for Joint/Combined/Interagency Operations. Army-Air Force Center for Low Intensity Conflict, Langley Air Force Base, VA. 21 December 1992.

USCINCCENT SOP. *Standing Operating Procedures for Humanitarian Assistance Survey Team (HAST)*.

USSOUTHCOM PLAN 95.*Foreign Disaster Relief*. 1994.

ARMY PUBLICATIONS

FM 5-114. *Engineer Operations Short of War*. 13 July 1992.

FM 8-42. *Medical Operations in a Low Intensity Conflict*. 4 December 1990.

FM 33-1. *Psychological Operations*. 18 February 1993.

FM 34-1.*Intelligence and Electronic Warfare Support to Low-Intensity Conflict Operations*. 2 July 1987.

FM 34-2-1. *Reconnaissance and Surveillance and Intelligence Support to Counter Reconnaissance*. 19 June 1991.

FM 34-3. *Intelligence Analysis*. 15 March 1990.

FM 34-36. *Special Operations Forces Intelligence and Electronic Warfare Operations*. 30 September 1991.

FM 34-130. *Intelligence-Preparation-of -the-Battlefield*. 23 May 1989.

FM 41-10. *Civil Affairs Operations*. 11 January 1993.

FM 63-6. *Combat Service Support in Low Intensity Conflict*. 21 January 1992.

FM 100-8. *Multinational Army Operations* (Final Draft). Spring 1993.

FM 100-19. *Domestic Support Operations*. 1 July 1993.

FM 100-23. *Peace Operations*. 30 December 1994.

After Action Report, US Army Forces, Somalia—10th Mountain Division. 10th Mountain Division. June 1993.

Operations Other Than War, Volume I, Humanitarian Assistance, Newsletter 926. Center for Army Lessons Learned (CALL), Fort Leavenworth, KS. December 1992.

Operations Other Than War, Volume II, Disaster Assistance, Newsletter 93-6. Center for Army Lessons Learned (CALL), Fort Leavenworth, KS. October 1993.

AIR FORCE PUBLICATIONS

AFP 110-3. *Civil Law*. December 1987.

AFP 110-31. *International Law - The Conduct of Armed Conflict and Air Operations*. November 1976.

AFR 55-35. *Air Force Assistance to Civilian Law Enforcement Officials*. December 1986.

NAVY PUBLICATIONS

COMSURFWARDEVGRU TACMEMO XZ0021-X-93. *Expeditionary Forces conducting Humanitarian Assistance and Disaster Relief Missions* (Draft). 1993.

Dworken, Jonathan T. *Measures of Effectiveness for Humanitarian Operations: Restore Hope and Beyond*. Center for Naval Analyses, Alexandria, VA (Draft).

Dworken, Jonathan T. Research Memorandum 93-140. *Military Relations with Humanitarian Relief Organizations: Observations from Restore Hope*. Center for Naval Analyses, Alexandria, VA. October 1993.

Dworken, Jonathan T. Research Memorandum 93-148. *Operation Restore Hope: Preparing and Planning the Transition to UN Operations*. Center for Naval Analyses, Alexandria, VA. March 1994.

Dworken, Jonathan T., Research Memorandum 93-120. *Rules of Engagement (ROE) for Humanitarian Intervention and Low-Intensity Conflict: Lessons from Restore Hope*. Center for Naval Analyses, Alexandria, VA. October 1993.

Jareg, Anthony M. *Logistics in Operation Restore Hope*. Center for Naval Analyses, Alexandria, VA. January 1994.

McGrady, Katherine A. W. Research Memorandum 93-114, *The Joint Task Force in Operation Restore Hope*. Center for Naval Analyses. March 1994.

McGrady, Katherine A. W. and David Zvijac. Research Memorandum 93-152, *Operation Restore Hope: Summary Report*. Center for Naval Analyses, Alexandria, VA. March 1994.

Siegel and Fabbri. FTC Interim Report 93-7, *Overview of Selected Joint Task Forces* (For Official Use Only). Center for Naval Analyses, Alexandria, VA. September 1993.

OTHER PUBLICATIONS

Burkle, F.M. Jr., MD. *Liaison in Complex Humanitarian Emergencies,* The Federal Disaster Response Conference. November 1993.

Cleveland, Harlan, Editor, American Refugee Committee. *New Strategies for a Restless World*. Minneapolis, MN. January 1993.

Cuny, Frederick C. *Dilemmas of Military Involvement in Humanitarian Relief*, "Soldiers, Peacekeepers and Disasters," pp 52-81. 1993.

Freeman, Lambert and Mims. "Operation Restore Hope - A USCENTCOM Perspective." *Military Review*. September 1993.

Miller, Paul E, Admiral. National Security Paper 11, *The Interagency Process*. Institute for Foreign Policy Analysis, Washington DC. 1993.

UN HCR Handbook for Emergencies. December 1982.

Index

A

AIDS prevention and education C-2
after-operation follow-up 4-21
Agency for International Development, Office of Foreign Disaster Assistance. *See* USAID OFDA
agriculture 4-7
air and port capabilities 4-4
air control authority 4-15
air search and rescue 4-14
airfields 4-4
airspace
  control facilities for 4-15
  coordination of 4-15
Alaska oil spill A-1
Allied Press Information Center. *See* APIC
ambassador. *See* US ambassador
American Council for Voluntary International Action C-0
American Friends of Action *Internationale Contre La Faim* C-0
ammunition storage points 4-1
AO 1-3, 1-6, 1-7, 2-2, 2-6, 4-11, 4-14
AOR 3-2
APIC 3-11
area
  assessments 4-3
  of operations. *See* AO
  of responsibility. *See* AOR
armed forces insignia I-1—I-2
arms control 1-5
Army engineer units 1-5
Army Special Forces Operational Detachments-A. *See* SF ODA
assessments
  area 4-3
  of damage 5-6
  process 5-7
  of situations and needs 3-2, E-1—E-2
Atlantic Command. *See* USACOM
augmentation 3-8

C

C^2 1-4
  relationships 4-2
  structure 1-9
C^3 4-2
CA 3-1, 3-5, 3-7, 4-0, 4-11
  officer 3-3
  units 1-5, 3-6, 3-7
cabinet-level authorities vi, 2-1, 2-5
CALL 4-21
campaign plan
  of commander 4-3
  of subordinate 4-3
cantonment areas 4-14
casualties, emergency treatment of 2-8, 5-5
Catholic Relief Services C-0
cayenne pepper spray 1-8
Center for Army Lessons Learned. *See* CALL
CENTCOM 3-8. *See also* CINCCENT
Central Command. *See* CENTCOM
CFST 4-1, 4-2
chain of command 2-1, 5-3
Chairman of the Joint Chiefs of Staff. *See* CJCS
chemical spills 5-0, 5-7
CIB 3-11
CINC 2-4, 2-7, 3-0, 3-2, 3-3, 3-8, 3-9, 4-9, 4-19, 5-5, 5-6
  geographic 4-21
  operational-level responsibilities of 3-0, 3-2
  supported 4-2, 5-5
CINCCENT 3-1, 3-2, 3-7
CINCUSACOM 5-4
CINCPAC 3-8, 5-4
CINCTRANS 5-4
civic action programs 3-7
civil
  authorities 5-5, 5-8
  conflicts 1-2
  disorder 1-7
  support 1-3
civil affairs. *See* CA
civil defense emergencies 5-0
civil-military operations center. *See* CMOC
civilian detainee procedures B-3
civilian organizations. *See* NGOs, PVOs, and IOs
CJCS 2-1, 2-7, 3-9, 5-4
  and NCA 2-1
  warning order 4-2
CJTF 1-5, 1-10, 3-8, 4-1, 4-3, 4-9, 4-20, 5-6
  and civilian medical requests 4-14
  and MOEs 4-7
  and ROE 4-5
  and technical assistance 4-14
  options for coordination 4-15
clique components 1-8
CMOC 3-5, 3-6, 3-7, 4-13, 4-14, 4-15, 4-16, 4-17
coalition
  liaison section 3-6
  forces 2-2, 4-3
  operations and liaison personnel 4-19
  partners 1-4
  response 1-4
  support teams. *See* CSTs
  units 3-3
code of behavior for military and civil defense personnel 4-5
Code of Federal Regulations B-3
Cold War, end of 1-3
combat service support. *See* CSS
combat support. *See* CS
combatant commanders 2-1
combined information bureau. *See* CIB
combined military operations. *See* multinational operations

command
  information 3-5
  relationships 1-4, 3-4, 5-6
command and control. *See* C^2
command, control, and communications. *See* C^3
commander
  of the joint task force. *See* CJTF
  of US Army Forces Command 5-5
commander in chief. *See also* CINC
  of Pacific Command. *See* CINCPAC
  of Transportation Command. *See* CINCTRANS
  of Central Command. *See* CINCCENT
commercial enterprises 5-8
Commodity Tracking System. *See* CTS
communications 3-5, 4-13, 4-16, 5-7
components' force lists 3-4
concept of operations 3-1
Congressional authority 2-1
connectivity iv, 3-0, 3-8, 3-9
construction
  and repair of local infrastructures 1-3
  of sanitation facilities 1-2
  of shelters 1-2
continental United States Armies. *See* CONUSAs
contracting 4-5, 5-8
CONUSAs 5-5
convoy
  escorts 1-7
  security 4-3
cooperation, among military and civilian activities 3-10
Cooperative for American Relief Everywhere C-0—C-1
coordinating authority 2-5
coordination
  for disasters and domestic emergencies 5-5
  process 2-1
country team 3-8
cross-cultural sensitivities 1-4
cryptographic materials. *See* communications
CS 4-0
CSS 1-7, 4-0
CSTs 3-8
CTF. *See* multinational task force
CTS 3-11
cultural respect 1-9, 1-10

D

DALIS 3-10, 3-11
damage or loss of property 1-1
DART 3-6, 3-9, 3-10, 4-11, 4-12, 4-13, 4-15, 4-18, G-0—G-2. *See also* USAID OFDA DART
DASD HRA 2-1, 3-9
DCO 5-3, 5-4, 5-5, 5-6
deconfliction problems 4-13
defense coordinating officer. *See* DCO
dental care 1-3
Department
  of Agriculture 2-5
  of Defense. *See* DOD
  of State. *See* DOS
  of Transportation 2-5
  of Treasury 2-5
deployable joint task force augmentation cell. *See* DJTFAC
deployment
  assets 5-7
  coordination 4-9
  of the JTF 4-9
  planning considerations 4-9
desired end state. *See* end state
destruction of property and infrastructure 3-2
diplomatic efforts 1-2
Director of Central Intelligence Agency 2-1
disaster
  assistance 5-1, 5-6, 5-8
  man-made 1-1, 1-2
  and MSCA 5-0
  relief 1-2, 3-2
  relief response 3-9
Disaster Assistance Logistics Information System. *See* DALIS
disaster assistance response team. *See* DART
disease 1-1
displaced persons. *See* refugees
distribution of relief supplies 2-6
DJTFAC 3-8
Doctors Without Borders/*Medicins Sans Frontiers* C-1
DOD 1-2, 1-10, 2-1, 3-9, 5-1, 5-3
  assets, withdrawal of 5-8
  Deputy Assistant Secretary for Humanitarian and Refugee Affairs. *See* DASD HRA
  director of military support. *See* DOMS
  executive agent 5-3, 5-4
  organization 2-3
  representative on the IWG 2-7
  Under Secretary of Defense for Policy 2-1
domestic
  chain of command. *See* chain of command
  emergencies 5-0, 5-4, 5-6
  operations 5-0
  support 1-3
DOMS 5-3, 5-4, 5-6
donation assistance 3-11
DOS 1-3, 1-10, 2-1, 2-5, 2-7, 3-2, 4-2, 4-19
  organization of 2-2
  representation on the IWG 2-7

E

earthquakes 1-2
electrical power 5-8
  disruption of 5-0
  stations and lines for 5-7
emergency
  shelters 5-7
  support assignment matrix 5-2
  support functions. *See* ESFs
emigration 2-10
employment
  of a JTF 4-10
  considerations 4-10, 4-11
end state 3-1, 5-8
engineer
  services 4-20
  support 5-1
environment iv, 1-6
  concerns about B-3
  hostile 1-6, 1-7
  interagency iv
  joint iv
  multinational iv
  nonpermissive 1-7
  operational 1-6, 1-7
  permissive 1-6, 1-8
  uncertain 1-7
ESFs 5-1, 5-3, 5-5
ethnic components 1-8
evacuation
  and immediate response authority 5-5
  of sick, injured, or wounded civilians 1-6
execution 4-10
Exercise Emerald Express 4-16

F

famine 1-2
FCO 5-1, 5-3, 5-4, 5-5, 5-6
federal
  agencies 5-1, 5-3, 5-6
  coordinating officer. *See* FCO
  relief efforts 5-7
  and state disaster assistance 5-5, 5-6
Federal Emergency Management Agency. *See* FEMA
Federal Response Plan. *See* FRP
feeding sites 5-7
FEMA 5-1, 5-3, 5-6
firefighters. *See* local emergency services
fiscal constraints 1-10
floods 1-2
food
  capacity 4-3
  distribution 1-8
  and medical care 1-2
  and water distribution 4-3
Food and Agriculture Organization D-2
force tailoring 1-9
Foreign Assistance Act of 1961 3-9
foreign
  conflict 1-2
  HA operations 1-2
  internal defense and development concept 1-3
  military forces iv, 1-4
former republic of Yugoslavia 1-1
frequency management 4-13
FRP 5-1, 5-3
funding authority 1-9, 1-10

G

Geneva Conventions of 1949 2-9
guerrillas, countering actions of 1-7

H

HA
  operations A-1—A-4
  lessons learned J-1—J-11
  NGOs and PVOs C-0—C-2
  teams vi
  UN organizations for D-1—D-2
HACC 3-2, 3-3
HAST 3-2, 3-8, 4-15
HCA 1-3
health
  service providers. *See* HSS
  service support. *See* HSS
  services. *See* HSS
HOC 3-5, 4-14, 4-15, 4-16
hospitals 5-7
host government 1-10
host nation
  capability 4-3
  civil authorities 1-1
  coordination 4-15
  support 4-4
HRSs 4-4, 4-11
HSS 3-5, 4-5, 4-8, 4-14
  diagnostic capabilities 4-14
  epidemiological monitoring 4-14
  health service providers 5-7
  logistics planning 4-8
  medical facilities 4-14
  preventive medicine 4-14
  treatment of civilians 4-14
humanitarian assistance coordination center. *See* HACC
humanitarian assistance survey team. *See* HAST
humanitarian and civic assistance. *See* HCA
humanitarian operations center. *See* HOC
humanitarian organizations. *See* NGOs, PVOs, *and* IOs
humanitarian relief sectors. *See* HRSs
hunger 1-1. *See also* food
hurricanes 1-2. *See also* typhoons
  Andrew A-2

I

ice manufacturing and storage plants 5-7
ICRC 1-2, 2-9, 2-10, 4-2, 4-11, 4-14, 4-15, 4-18, 4-20
IFRC 2-9, 2-10, 3-9
immediate response 5-5
immigration 2-11
individual national Red Cross and Red Crescent organizations. *See* Red Cross
information, requests for 5-8
information-gathering process 5-8
infrastructure, gathering intelligence on 4-3, 4-7
INMARSAT 4-13
in-place organizations vi
insignia of United States armed forces I-1—I-2
integration of planning 2-7
intelligence 4-3, 4-7, 4-12
interaction among military and civilian agencies vi
interagency
  coordination 2-0, 2-1, 2-7
  operations 3-0
  planning 2-7
  procedures vi
  working group. *See* IWG
international
  agencies vi
  agreements B-1
  authorities 2-7
  organizations. *See* IOs
International Committee of the Red Cross. *See* ICRC
International Federation of Red Cross and Red Crescent Societies. *See* IFRC
International Medical Corps C-1
International Organization for Migration. *See* IOM
International Rescue Committee C-1
interoperability vi
IOM 2-10, 2-11
IOs 1-2, 1-9, 1-10, 2-6, 2-7, 3-1, 3-2, 3-3, 3-6, 3-8, 3-10, 4-3, 4-4, 4-11, 4-13, 4-14, 4-15
  and MOEs 4-7
  logistics requirements for 4-15
Irish Concern C-1
IWG 2-1, 2-5, 2-7

J

J3 2-2, 3-6
J4 4-1, 4-4
JCS 1-10, 4-19
JFC 2-0, 3-7
JFUB 4-1
JIB 3-5, 3-11
JMC 4-1
JOC 4-18
joint
  doctrine 4-2
  force operations 1-4, 3-1
  forward laboratory 4-9
  readiness exercises 4-2
  staff 2-2, 2-4
  visitors bureau 4-1
Joint Chiefs of Staff. *See* JCS
joint facilities utilization board. *See* JFUB

joint force commander. *See* JFC
joint information bureau. *See* JIB
Joint Operations Planning and Execution System. *See* JOPES
JOPES 4-5, 4-7, 4-9
joint task force iv, 3-2, 3-3, 3-4, 3-6, 3-8, 4-15
  Alaska Oil Spill A-1
  Andrew 1-5, 1-6
  CINC's responsibilities for 3-3
  commander of iv, 3-4, 4-5
  composition of 4-3
  deployment of 4-9
  for domestic emergencies and disasters 5-6
  employment of 4-10
  establishment of 4-4
  as focal point for coordination 1-4
  formation of 3-3
  headquarters of 3-4, 3-5
  notional organization of 4-0, 4-1
  operational-level responsibilities of 3-0
  PSYOP for 3-8
  response vi
  special staff sections of 4-0
  support command 4-1
  transitioning functions of 4-20
  two-tier command of 3-4
Joint Universal Lessons Learned Systems 4-21

L

language translation 1-4
laws
  of armed conflict B-1
  civilian detainee procedures B-3
  enforcement on navigable waters 2-5
  of the sea B-1
  and property, B-3
  and rules of engagement B-2
legal
  advisor 3-3
  authority 1-9, 1-10, 5-1
  issues B-1—B-3
  requirements 3-11
legitimacy 1-9
lessons learned 3-10, J-1—J-11
liaison 3-2, 4-10, 4-19
  officer 4-18, H-1—H-2
  requirements 1-4
  teams 4-10
local
  emergency services 5-7
  government support 5-8
  responsibilities 5-8
logistics vi, 4-4
  data base 3-10
  operations center 3-2, 3-3, 3-6, 4-4
  readiness center 2-2
  support to coalition countries 4-5
loss
  of life, prevention of 1-2
  of property 1-1
Lutheran World Relief C-1

M

mandate 2-9
Marine
  combat service support 1-4
  expeditionary forces A-1
MCC 4-12
measures of effectiveness 3-1, 4-6, 4-7
media
  coverage 1-9, 1-10
  representatives 3-11
medical support. *See also* health service support
  assistance 1-8
  care 1-3
  public health 4-7
  survey team 4-21
  treatment of displaced civilians 5-7
meteorology and oceanography 3-5
METL 4-16
military
  and civil defense assets 4-5
  humanitarian civil assistance operations vi
  involvement in domestic operations 5-8
military operations other than war. *See* MOOTW
military support to civil authorities
  command relationships 5-7
  and domestic operations 5-0
Military Sealift Command. *See* USTRANSCOM
Military Traffic Management Command. *See* USTRANSCOM
mission
  assessment of 4-3
  creep 3-1, 4-11
  requirements, assessment of 5-5
  success, criteria for 5-8
  termination of 1-9, 1-10
mission-essential task list. *See* METL
mission statement, development of 3-0, 3-1, 3-2
MOOTW 1-5, 1-6, 4-12
movement control center. *See* MCC
movements 3-3
multinational
  forces 3-8
  operations 1-3, 1-4, 4-19
  logistics command 4-5
  task force 4-3
multiservice forces iv

N

nation assistance 1-3, 1-5
Nation Assistance Program 1-3
national
  agencies vi
  authorities vi, 2-1
National Command Authorities. *See* NCA
National Guard 5-1
National Red Cross and Red Crescent Societies 2-10
National Security Council. *See* NSC
National Security Strategy 5-1
natural disasters 1-1, 1-2
Navy sealift and construction. *See* Seabees
NBC 3-5
NCA 1-10, 2-1, 2-7, 3-3, 4-19
  and domestic operations 5-0
NGOs vi, 1-1, 1-3, 1-9, 1-10, 2-6, 2-7, 2-11, 3-1, 3-2, 3-3, 3-6, 3-8, 3-10, 4-2, 4-3, 4-4, 4-5, 4-7, 4-11, 4-13, 4-14, 4-15
  cooperation of 1-6
  listing of C-0—C-2
  logistics requirements for 4-15
  and MOEs 4-7
  and ROE 4-5
  security for 4-12
NGO/PVO advisor 3-3
noncombatant evacuation operations 1-5
nongovernmental organizations. *See* NGOs
nonmilitary agencies iv

nonprofit organizations. *See* PVO
Northern Iraq 1-1
NSC 2-1, 2-2, 2-5
nuclear, biological, chemical. *See* NBC

O

objective 1-8
OFDA. *See* USAID OFDA
Office of Foreign Disaster Assistance. *See* USAID OFDA
Office of Management and Budget 2-5
oil spills 1-2
Operations
  Able Manner/Safe Harbor 1-5
  Deny Flight A-4
  Desert Shield 1-6
  Fiery Vigil A-1
  Haiti A-2
  Hurricane Andrew
  large-scale 1-4
  Provide Comfort 1-5, 1-6, 3-10, 4-3, 4-10, 4-19, A-1
  Provide Hope A-2
  Provide Promise A-3 and A-4
  Provide Relief A-2
  Restore Hope 1-4, 1-5, 2-2, 2-6, 3-1, 3-2, 3-3, 3-7, 4-1, 4-4, 4-9, 4-15, 4-20, A-3
  Sea Angel 1-5, A-1
  Typhoon Iniki A-3
  Typhoon Omar A-2
  types of 1-2
  Urgent Fury 1-5, 1-6
operational
  assessments 3-9
  coordination iv
  phases 3-1
  security awareness 3-6
  -level coordination 3-9
  -level unified command 3-3
operations order. *See* OPORD
OPORD 4-2
organizational preparedness 1-9

P

PA 1-10, 3-2, 3-5, 3-6, 3-11, 4-3, 4-11, 4-14
PAO 3-3
Pacific Command. *See* USPACOM
PAHO 3-10, 3-11
Pan American Health Organization. *See* PAHO
PE 1-2, 1-6
peace
  building 1-2
  enforcement. *See* PE
  operations 1-1, 1-2, 1-3, 1-6
peacekeeping operations. *See* PKO
peacemaking 1-2
perseverance 1-8
personnel recovery operations 1-7
PKO 1-2, 2-9
planning
  for disasters and domestic emergencies 5-5, 5-6
  integration, of strategic, operational, and tactical-level planning 2-7
  and regional federal agencies 5-6
  state responsibilities for 5-6
police 5-7
political-military advisors 4-19
Posse Comitatus Act 5-1
postal facilities 4-1
predeployment 3-2
  planning 4-2, 4-7, 4-8
  plans 4-2
President of the United States 2-1
President's Special Coordinator for International Disaster Assistance 2-1, 2-7
preventive diplomacy 1-2
principles of operations
  legitimacy 1-9
  objective 1-8
  perseverance 1-8
  restraint 1-9
  security 1-9
  unity of effort 1-8
private voluntary organizations. *See* PVOs
proactive programs 1-2
property
  destruction of 2-8
  protection of 1-2
psychological operations. *See* PSYOP
PSYOP 3-5, 3-6, 3-7, 3-8, 4-11
  and coalition forces 3-7
public
  facilities, repair of 1-2
  services 5-5
  works 5-1
public affairs. *See* PA
public affairs officer. *See* PAO
PVOs vi, 1-2, 1-3, 1-9, 1-10, 2-6, 2-7, 2-11, 3-1, 3-2, 3-3, 3-6, 3-8, 3-10, 4-2, 4-3, 4-4, 4-5, 4-7, 4-11, 4-13, 4-14, 4-15
  cooperation of 1-6
  listing of C-0—C-2
  logistics requirements for 4-15
  and MOEs 4-7
  and NGO advisors 3-3
  and ROE 4-5
  security for 4-12

R

racial components 1-8
radiological accidents 5-0
range of operations 1-3
reactive programs 1-2
readiness 4-2
reconnaissance 3-2
reconstitution of assets 4-20
reconstruction phase 2-4
recovery 5-6
Red Cross/Red Crescent Movement 2-9. *See also* National Red Cross and Red Crescent Societies
redeployment 4-4, 4-19—4-20
refugees 2-10, 4-18, 4-19
  assistance for 1-2
  camps for 1-2, 4-3, 4-19
  definition of 1-2
regional unified commands 1-3
rehabilitation phase 2-4, 2-8
relief phase2-4
religious structures 1-10
requests for information 5-8
respect, cultural 1-9, 1-10
response 5-6
response triad 2-6, 2-9, 3-1
restoration 5-6
  mission 5-8
  operations 5-6
restraint 1-9
riot control agents 1-8
roads 4-4
Robert T. Stafford Disaster Relief and Emergency Assistance Act. See Stafford Act
ROE 1-6, 1-9, 4-2, 4-5, 4-12
  cards 4-5, B-2, B-3
  sample B-2
rules of engagement. *See* ROE

S

sanctions 1-2
Save the Children Federation/ United Kingdom C-1
SCO 5-5
Seabees 1-4, 1-5
search and rescue 4-14
Secretary
of the Army 5-3, 5-4
of Defense 1-10, 2-1, 3-9, 5-3
of State 2-1
secure telephones. *See* communications
security vi, 1-7, 1-9, 2-8, 4-5, 4-12
for convoys 3-1
of the JTF 4-12
and level of violence 4-6, 4-7
of lodgment 4-4
operations 4-4
risks 4-3
service component commander 3-4
SF ODA 3-8
shipping, protection of 1-5
single-service operations 1-5
situation and needs assessments 3-2, E-1—E-2
situational awareness 4-13
SJA 3-5
small-unit operations 1-5
SOF 3-1, 3-6
Somalia 1-1, 1-3, 1-4, 3-1, 3-3. *See also* Operation Restore Hope
special coordinator for international disaster assistance 2-1, 2-7
special operations forces. *See* SOF
staff judge advocate. *See* SJA
staff surgeon 3-6
Stafford Act 5-1
STARC 5-6
state agencies, responsibilities of 5-8
state area command. *See* STARC
state coordinating officer. *See* SCO
storage facilities 4-4
strategic-level
coordination 2-0
interagency coordination process vi, 2-3
planning 2-1
roles 2-0
strikes and raids 1-5
subordinate commands 4-9
subunified commander 3-4
SUMA system 3-10, 3-11
supplies
reception, storage, and distribution of 5-7
and services 1-10
support
agreements 3-11
assets 4-4
request flow 4-18
supported CINC 4-2, 5-5
supporting commands 4-9

T

tactics, techniques, and procedures vi
technical assistance 4-14
telecommunications nodes. *See* communications
termination
of disaster assistance 5-8
standards for 5-8
terrain 2-9
terrorist actions 1-7
theater of operations 3-0
threat assessments 3-2
time-phased force deployment data. *See* TPFDD
Title 10 authority 1-9, 2-7
TPFDD 4-4
training 4-5
transit facilities 4-1
transition 4-2
plan 4-20, 4-21
to UN peacekeeping forces 4-4
transportation vi, 4-3
Transportation Command. *See* USTRANSCOM
typhoons
Iniki, A-2
Omar, A-2

U

UNDHA 2-8, 3-9, D-1—D-2
UNDP 2-8, D-1
UNHCR 3-10, 3-11, D-1
UNICEF 3-9, D-2
unified CINC 3-2
unified task force. *See* UNITAF
unified commander 2-6, 2-7, 3-8
operational-level responsibilities 3-1
unified commands 3-0, 3-1, 5-4
predeployment planning for 4-0
structure of 3-4
unilateral US operations 1-3
UNITAF 3-1, 3-7, B-3
United Nations 1-2, 1-3, 2-8, 2-9
agencies 1-9, 3-8, 4-2, 4-13
coordinated operations 1-3
country team 2-8
Department of Humanitarian Affairs. *See* UNDHA
Development Program. *See* UNDP
emergency coordinator. *See* UNDHA
forces 4-5
General Assembly 2-8
High Commissioner for Refugees. *See* UNHCR
objectives 2-8
observers 1-3
operations 2-1, 4-5
organization for complex emergencies 2-8
organizations for HA 2-7, 2-8, D-1—D2
response 2-9
resolution 2-8
Secretary General 2-8
security 4-3
Security Council 2-8
Under Secretary General for the UN Department of Humanitarian Affairs. *See* UNDHA
United Nations Childrens' Fund. *See* UNICEF
United Nations World Food Program. *See* World Food Program
United States 1-1
Air Force 1-1
ambassadors 2-1, 2-7
armed forces, insignia of I-1—I-2
Atlantic Command 5-4, 5-5
Coast Guard 1-1, 1-5, 2-5, A-1
country team 2-1
forces 1-1
Government agencies 3-8
Government-furnished HA materiel 4-5
Marine Corps 1-1
Navy 1-1
unilateral operations 1-4

United States Agency for International Development. *See* USAID
United States Army 1-1
Chemical Corps 5-4
Corps of Engineers 5-3
Forces Command 5-4
Secretary 5-3, 5-4
unity of effort 1-8
USAID 1-9, 1-10, 2-1, 2-2, 2-4, 2-5, 2-7, 2-11, 3-0, 3-3, 4-15
administrator 2-1
Bureau for Humanitarian Response 2-5
OFDA 1-9, 1-10, 2-5, 2-7, 2-8, 3-0, 3-3, 3-8, 3-9, 4-2, 4-11, 4-15, 4-21, F-1—F-3
OFDA DART 3-6, 3-9, 3-10, 4-11, 4-12, 4-13, 4-15, 4-18
organization of 2-5
USCENTCOM 2-2, 2-6, 3-1, 3-2, 3-3, 3-7. *See also* CINCCENT
USCINCCENT. *See* CINCCENT
USCINCPAC. *See* CINCPAC
USCINCTRANS. *See* CINCTRANS
US Central Command. *See* USCENTCOM
US chief of mission. *See* US ambassador
US Information Agency 2-5
US Information Service. *See* USIS
US Transportation Command. *See* USTRANSCOM
use of force 1-7
USIS 1-10
USPACOM 5-4
USTRANSCOM 3-2, 4-5, 4-9, 5-4
utilities 5-5

V

veterinary care 1-3
Vice President of the United States 2-1

W

waste disposal facilities 5-7
water treatment plants 5-7
weapons policy 2-9, B-3
World Food Program 3-9, D-1
World Health Organization D-2
World Vision Relief and Development C-2
Worldwide Military Command and Control System 3-8, 4-9
Worldwide Military Command and Control System Intercomputer Network 4-7

FM 100-23-1
FMFRP 7-16
NDC TACNOTE 3-07.6
ACCP 50-56
PACAFP 50-56
USAFEP 50-56
31 OCTOBER 1994

By order of the Secretary of the Army:

GORDON R. SULLIVAN
General, United States Army
Chief of Staff

Official:

JOEL B. HUDSON
Acting Administrative Assistant to the
Secretary of the Army
00267

DISTRIBUTION:
Active Army, USAR, and ARNG: To be distributed in accordance with DA Form 12-11E, requirements for FM 100-23-1, Multiservice Procedures for Humanitarian Assistance Operations. (Qty rqr block no. 5354)

PCN: 140 071600 00